SEGWAY

SEGWAY TECHNOLOGY CO., LTD.

POWERSPORTS.SEGWAY.COM

Vision : 20241215
S11-L200003-LEN-00

SEGWAY

OWNER'S MANUAL

SGW2000F-S3

Read this manual carefully. It contains important safety information and safe operating instructions, and should be kept with the vehicle at all times.

This is an adult vehicle only. Operation is prohibited for those under 16 years of age.

WELCOME

Thank you for buying this Segway. Segway off-road vehicles will bring you a new driving experience.

For your driving safety, read this manual and all on-product labels before riding. This manual contains numerous warnings, safety information and safe operating instructions, maintenance and service information, maintenance instructions and safety warnings.

Reading this manual will help you quickly understand the vehicle and help you with safe driving practices.

Periodic maintenance procedures are included in this manual and should be performed regularly to keep your vehicle running safely.

IMPORTANT NOTICE

This vehicle is designed and manufactured for off-road use only and complies with all applicable off-road noise, vibration and emission regulations.

Before driving the vehicle, please understand the local laws and regulations, abide by the local traffic regulations.

This manual describes all equipment including optional components. Therefore, some of the optional equipment described in the manual may be not installed on your vehicle.

Bluetooth® is a registered trademark of Bluetooth Sig, Inc. QR Codes® is a registered trademark of DENSO WAVE INCORPORATED. Google Play® is a registered trademark of Google, Inc. Apple® is a registered trademark of Apple Inc. Segway® is a registered trademark of Segway Inc. Unless noted, trademarks are the property of Segway Powersports Inc. and its affiliates.

Copyright 2025 Segway Powersports Inc. All information contained within this publication is based on the latest product information at the time of publication. Due to constant improvements in the design and quality of production components, some minor discrepancies may result between the actual vehicle and the information presented in this publication. Depictions and/or procedures in this publication are intended for reference use only. No liability can be accepted for omissions or inaccuracies. Any reprinting or reuse of the depictions and/or procedures contained within, whether whole or in part, is expressly prohibited.

If your vehicle needs any service and repair. please contact your authorized Segway dealer to provide service.

Visit **http://powersports.segway.com** for a list of dealers and service locations.

INDEX

SAFETY INTRODUCTION	1
VEHICLE DEVICE	17
OPERATION	57
MAINTENANCE, STORAGE AND TRANSPORTATION	81
SPECIFICATIONS	136
TROUBLESHOOTING	142
EMISSION CONTROL SYSTEM	162
WARRANTY	168

PRE-RIDE INFORMATION

This SEGWAY POWERSPORTS vehicle is an off-road vehicle. Familiarize yourself with all laws and regulations concerning the operation of this vehicle in your area.

⚠ WARNING

Failure to follow the warnings and safety precautions contained in this manual will result in serious injury or death. The Segway is not a toy and can be dangerous to operate. This vehicle does not handle like a car, truck, or SUV. A crash or rollover can happen quickly if you do not take proper precautions, even during routine maneuvers such as turning, driving up a hill, or negotiating an obstacle.

- Read the owner's manual that came with the vehicle.
- Understand all safety warnings, precautions, and operating procedures before operating the vehicle.
- Keep this manual with you in the vehicle.
- Never operate this vehicle without proper instruction.
- Attend an authorized training course, see the Safety Training section for more information.
- This vehicle is for adults only, you must be 16 years of age or older and have a valid driver's license to operate this vehicle.
- Always use the driving net (or doors) when riding in this vehicle, and keep your hands, feet, and all other body parts inside the vehicle at all times.
- Always wear a helmet, eye protection, gloves, long-sleeved shirts, long pants, and over-the-ankle boots.

- Never operate this vehicle while under the influence of drugs or alcohol, as these conditions can impair judgment and reduce the operator's ability to react.
- Complete the New Operator Driving Procedure outlined in this manual, and never allow a guest to operate the vehicle until the guest has completed the New Operator Driving Procedure.
- Do not allow a guest to operate the vehicle unless the guest has completed safety training, reviewed the owner's manual, and all safety tags.

The meaning of these signs

This is the safety alert symbol. It is used to alert you to potential personal injury hazards. Obey all safety messages that follow this symbol to avoid possible injury or death.

⚠ DANGER

DANGER indicates a hazardous situation which, if not avoided, will result in death or serious injury.

⚠ WARNING

WARNING indicates a hazardous situation which, if not avoided, could result in death or serious injury.

⚠ CAUTION

CAUTION, used with the safety alert symbol, indicates a hazardous situation which, if not avoided, could result in minor or moderate injury.

CAUTION

CAUTION, used without the safety alert symbol, is used to address practices not related to personal injury.

NOTICE

NOTICE is used to address practices not related to personal injury.

The Prohibition Safety Sign indicates an action NOT to take in order to avoid a hazard.	The Mandatory Action Sign indicates an action that NEEDS to be taken to avoid a hazard.

SAFETY INTRODUCTION

WARNING LABELS 3
SEVERE INJURY OR DEATH 7
IMPORTANT SAFETY INFORMATION 10
READING THE MANUAL 10
SAFE DRIVING AGE 10
RIDING EQUIPMENT 10
USING ALCOHOL OR DRUGS 11
VEHICLE MODIFICATION 12
PASSENGERS 12
CONTACT EXHAUST 12
FUEL SAFETY 13
SAFETY BELT 13
CAB DOOR 13
LOADING THE VEHICLE 14
PASSENGERS IN THE CARGO COMPARTMENT 14
OPERATING ON PAVEMENT 15
TRANSMISSION HEATING 15
BRAKE SYSTEM HEATING 15
PUBLIC ROAD OPERATION 15
OVERSPEED 15
TURNING 16
JUMPING AND STUNTS 16
INCORRECT MOUNTAIN CLIMBING 16
DOWN THE HILL 16
SIDE HILL 16

Failure to follow the warnings and safety precautions in this manual may result in serious injury or death. It can be dangerous to operate an off-road vehicle and is driven differently from other vehicles, such as motorcycles and automobiles. If proper precautions are not taken, a collision or rolled-over may occur during normal maneuvers such as turning, climbing, or overcoming obstacles. Understand all safety warnings, precautions and operating procedures before operating the vehicle. Bring this manual with you.

WARNING LABELS

To protect you, warning labels have been placed on the vehicle. Read carefully and follow the instructions on the vehicle label. If any label described in this manual is different from the label on your vehicle, the label on the vehicle shall prevail. If any label becomes illegible or falls off, contact the authorized Segway dealer to purchase a new label for replacement.

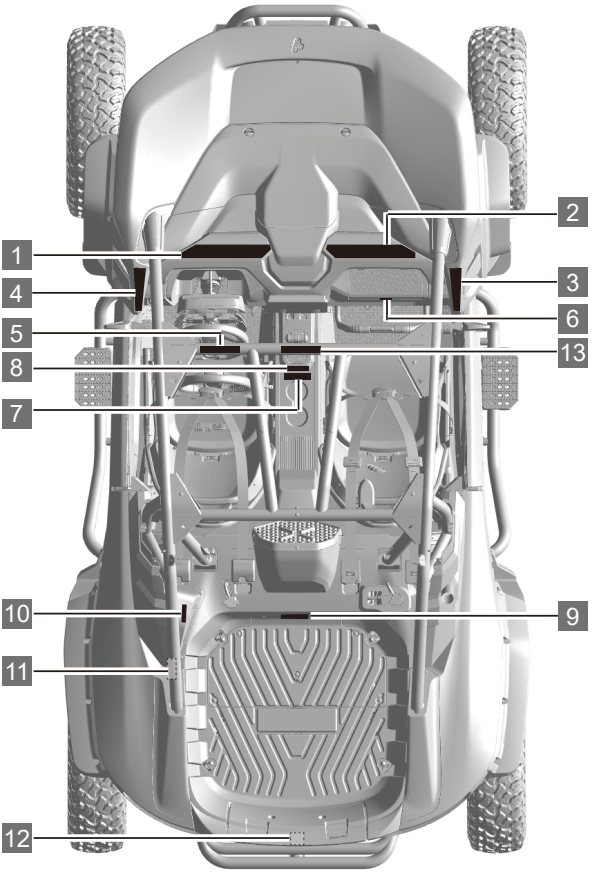

1

WARNING
Improper Use of this Vehicle Can Cause Severe Injury or Death
Be Prepared
• Fasten seat belts and make sure nets or doors are securely latched in place.
• Wear an approved helmet and protective gear.
• Each rider must be able to sit with back against seat, feet flat on the floor, and hands on steering wheel or handholds. Stay completely inside the vehicle.
Read and understand all safety labels, locate and read owner's manual. Follow All Instruction and Warnings.
Drive Responsibly
Avoid loss of control and rollovers:
• Avoid abrupt maneuvers, sideways sliding, skidding or fishtailing, and never do donuts.
• Avoid hard acceleration when turning, even from a stop.
• Slow down before entering a turn.
• Plan for hills, rough terrain, ruts, and other changes in traction and terrain. Operate slowly when in unfamiliar terrain. Avoid paved surfaces.
• Avoid side hilling (riding across slopes).
Rollovers have caused Severe injuries and death. Even on flat, open areas.
Be Sure Riders Pay Attention and Plan Ahead
If you think or feel the vehicle may tip or roll, reduce your risk of injury:
• Keep a firm grip on the steering wheel or handholds and brace yourself.
• Do not put any part of your body outside of the vehicle for any reason.
Require Proper Use of Your Vehicle
Do your part to prevent injuries:
• Do not allow careless or reckless driving.
• Make sure operators are 16 or older with a valid driver's license.
• Do not let people drive or ride after using alcohol or drugs.
• Do not allow operation on public roads (unless designated for off-highway vehicle access) – collisions with cars and trucks can occur.
• Do not exceed seating capacity: 1 passenger.
NEVER UNDER 16
S11-L110002-LEN-00

2

WARNING
PASSENGER
Improper Use of this Vehicle Can Cause Severe Injury or Death
Be Prepared
• Fasten seat belt and make sure net or door is securely latched in place.
• Wear an approved helmet and protective gear.
You must be able to sit with back against seat, feet flat on the floor, and hands on handholds. Stay completely inside the vehicle.
Be Sure Riders Pay Attention and Plan Ahead
If you think or feel the vehicle may tip or roll, reduce your risk of injury:
• Keep a firm grip on handholds and brace yourself.
• Do not put any part of your body outside of the vehicle for any reason.
PASSENGER QUALIFICATIONS AND RESPONSIBILITIES
• Do not ride after using drugs or alcohol.
• Ask the operator to slow down or stop if you feel uncomfortable when riding.
S11-L110002-LEN-00

3

WARNING
Be prepared in case of rollover
If the vehicle rolls over, any part of your body (such as arms, legs, or head) outside of the vehicle can be crushed by the cage, vehicle frame, or other parts of the vehicle. Fasten seat belt and make sure net and/or door is securely latched in place to help you avoid sticking out arms or legs.
NEVER hold the cab frame while riding.
NEVER try to stop a rollover using your arm or leg.
S11-L110003-LEN-00

4

WARNING
Be prepared in case of rollover
If the vehicle rolls over, any part of your body (such as arms, legs, or head) outside of the vehicle can be crushed by the cage, vehicle frame, or other parts of the vehicle. Fasten seat belt and make sure net and/or door is securely latched in place to help you avoid sticking out arms or legs.
NEVER hold the cab frame while riding.
NEVER try to stop a rollover using your arm or leg.
S11-L110004-LEN-00

5

This roll over protective structure meets the performance requirements of (EU) No 1322/2014 Annex VIII .

S11-L110009-LEN-00

6

⚠ CAUTION

Storage compartment
Maximum load: **11 lbs (5 kg)**

S11-L110006-LEN-00

7

⚠ WARNING

Turning in 4WD - Lock (Front Diff.Lock) requires more steering effort. Allow more room to turn.

P

Select park mode (P) before exiting vehicle. The vehicle can roll if not in PARK. To enable park mode, apply brake and press pushbutton (P)

S11-L110013-LEN-00

8

NOTICE

To avoid damage to the transmission parts, before towing the vehicle, power on and start the engine, change the gear in neutral (N), or put the transmission in neutral (N)with the vehicle tool.

S11-L110014-LEN-00

9

⚠ WARNING

› **Improper tire pressure or overloading can cause loss of control. Loss of control can result in severe injury or death.**

- **COLD TIRE PRESSURE:**
  Front: 22.0 psi (150 kPa) **Rear: 22.0 psi (150 kPa)**
- **MAXIMUM WEIGHT CAPACITY** (INCLUDES WEIGHT OF OPERATOR PASSENGERS CARGO AND ACCESSORIES) **: 640 lbs. (291 kg)**
- **MAXIMUM CARGO BOX LOAD: 300 lbs. (136 kg)**

NEVER carry passengers in cargo box.

- Passengers can be thrown off. This can cause serious injury or death.
- Never exceed payload limits of vehicle.
- Reduce speed, turn gradually, and allow greater distance for braking when carrying cargo.
- Overloading or carrying tall, off-center, or unsecured loads will increase your risk of losing control. Loads should be centered and carried as low as possible in box.
- For stability on rough or hilly terrain, reduce speed and cargo.

NEVER place gasoline, flammable or dangerous liquids container on carrier. This can lead to a fire or an explosion.

NEVER attach to the cab frame to pull a load. This can cause the vehicle to tip over.

S11-L110005-LEN-00

10

WARNING

Air Filter Inlet Grill. **DO NOT COVER!**

S11-L110008-LEN-00

11

CAUTION

The air filter must be maintained in accordance with the requirements of the Segway Owner's Manual, otherwise it may seriously damage your engine.

S11-L110007-LEN-00

12

WARNING

IMPROPERLY LOADING A TRAILER MAY CAUSE LOSS OF CONTROL. EVENLY BALANCE THE LOAD.

- Maximum unbraked towing mass **800 kg**
- Maximum unbraked tongue mass **100 kg**
- Maximum inertiabraked towing mass **1000 kg**
- Maximum inertiabraked tongue mass **100 kg**

S11-L110015-LEN-00

13

EMERGENCY EXIT

S11-L110011-LEN-00

SEVERE INJURY OR DEATH

CAN RESULT IF YOU DO NOT FOLLOW THESE INSTRUCTIONS:

- The minimum recommended driving age for this vehicle is 16 years.
- Never operate this vehicle without wearing an approved motorcycle helmet that fits properly.
- Wear eye protection (goggle or a face shield), gloves, over-the-ankle boots, long-sleeved shirt or jacket, and long pants.
- Never consume alcohol or drugs before or while operating this vehicle.
- Never attempt jumps or other stunts.
- Never operate at speeds too fast for your skills or the conditions. Always go at a speed that is proper for the terrain, visibility, operating conditions, and your experience.
- Always inspect your vehicle each time you use it to be sure it is in safe operating condition.
- Never operate on excessively rough, slippery, or loose terrain until you have learned and practiced the skills necessary to control the vehicle on such terrain. Always be cautious on these kinds of terrain.
- Always follow the inspection and maintenance procedures as well as the schedules described in this manual.
- Never operate on hills that are slippery or ones where you will not be able to see safely far enough ahead of you. Never go over the top of a hill at speed if you cannot see what is on other side.
- Always keep both hands, arms, feet, and legs inside the vehicle at all times during operation. Keep your feet on the floorboard. Never hold onto the enclosure, otherwise, you could be injured.

- Always keep both hands on the steering wheel when driving.
- Always go slowly and be careful when operating on unfamiliar terrain. Always be alert to changing terrain conditions when driving the vehicle.
- Never wrap your thumbs and fingers around the steering wheel. This is particularly important when driving in rough terrain. The front wheels will move right and left as they respond to the terrain, and this movement will be felt in the steering wheel. A sudden jolt could wrench the steering wheel around, and your thumbs or fingers could be injured if they are in the way of the steering wheel spokes.
- Never turn at excessive speed. Practice turning at slow speeds before attempting to turn at faster speeds. Do not attempt turns on steep inclines.
- Always follow proper procedures for going uphill. If you lose control and cannot continue up a hill, back down the hill with the engine in reverse gear. Use engine braking to help you go slowly. If necessary, use the brakes gradually to help you go slowly.
- Never operate the vehicle on hills that are too steep. Go straight up and down hills where possible.
- Never operate the vehicle in fast flowing water or water deeper than the floorboards on this model. Remember that wet brakes may have reduced stopping ability. Test your brakes after leaving water. If necessary, apply the brake several times to let friction dry out the linings.
- Always be sure there are no obstacles or people are behind you when you operate in reverse. When it is safe to proceed in reverse, go slowly.
- Always check terrain before going down hills. Go as slowly as possible. Never go down a hill at high speed.
- Always check for obstacles before operating in a new area.

- Do not brake abruptly when carrying loads in the cargo bed.
- Always use the size and type of tires specified in this manual.
- Always maintain proper tire pressure as described in this manual.
- Never exceed the stated cargo load capacity. Cargo should be as far forward in the bed as possible, and distributed evenly from side to side. Be sure cargo is secured so that it cannot move around during operation. Reduce your speed and follow the instructions in this manual for carrying cargo or pulling a trailer. Allow a greater distance for braking.
- When the transmission has high oil temperature (oil temperature warning light on, insufficient power) on mountain roads, slopes, or under heavy loads, the driver needs to stop the vehicle to cool it down and go to a dealer shop for inspection and repair as soon as possible.
- Brake discs can be over heated after continuous braking. Allow brake disc to cool before servicing.
- Avoid the risks related to contact with hot surfaces, including residual risks such as filling oil or coolant in hot engines or transmissions.
- Exhaust system components are very hot during and after use of the vehicle. Hot components can cause burns and fire. Do not touch hot exhaust system components. Always keep combustible materials away from the exhaust system.
- Use caution when traveling through tall grass, especially dry grass. Always inspect the underside of the vehicle and areas near the exhaust system after driving through tall grass, weeds, brush, and other tall ground cover. Promptly remove any grass or debris clinging to the vehicle.

IMPORTANT SAFETY INFORMATION

READING THE MANUAL

Driving an Vehicle improperly increases the risk of accidents. The driver must know how to drive the vehicle correctly in different situations and on different terrain.

Before driving the vehicle, all drivers must complete the required driving safety training. Please ensure that each driver has read this manual and all product warning labels and has passed the safety training course. Otherwise, the vehicle will not be allowed to drive.

SAFE DRIVING AGE

The minimum recommended driving age for this vehicle is 16 years. Children under the age of 16 must not drive this vehicle. Never drive the vehicle without proper driving training. Training courses are required. Please ensure that each driver has read this manual and all product labels and has completed a safety training course.

RIDING EQUIPMENT

For your safety,we strongly recommend that you always wear an approved motorcycle,eye protection,boots,gloves,long pants,and a long-sleeved shirt or jacket whenever you ride.

Although complete protection is not possible,wearing proper gear can reduce the chance of injury when you ride.

Helmet

Wearing a helmet can prevent head injuries. At all times, you must wear a helmet that meets basic safety standards when driving. Both U. S. and Canadian qualified helmets bear a U. S. Department of Transportation label. ECE 22.05 marks are available in Europe, Asia and Oceania. The ECE mark consists of a circle around the letter E, followed by the approved area codes for different countries. The approval number and serial number are also displayed in the label.

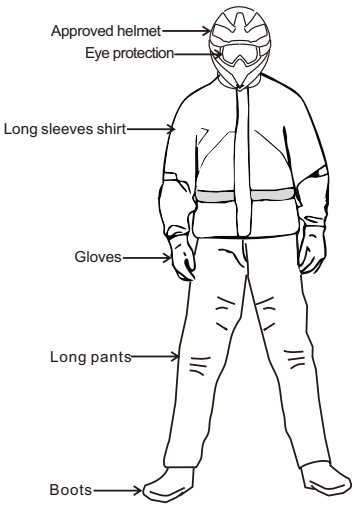

Sturdy off-road motorcycle boots to help protect your feet, ankles, andlower legs.

Off-road motorcycle gloves to help protect your hands.

It is recommended to wear riding pants with knee and hip pads,a riding jersey with padded elbows and, a chest/shoulder protector.

Driving Vehicle after drinking or taking drugs may adversely affect a driver's judgment, reaction time, balance, and feelings. Do not drink alcohol or take drugs before or during driving.

USING ALCOHOL OR DRUGS

Operating this vehicle after consuming alcohol or drugs could adversely affect operator judgment,

reaction time, balance and perception.

Never consume alcohol or drugs before or while operating this vehicle.

VEHICLE MODIFICATION

We strongly recommend that consumers do not attempt to increase vehicle speed or use any equipment that increases the power of the vehicle. If any equipment is added to the vehicle, or if any modifications are made to the vehicle to increase the vehicle speed or power, the all-terrain vehicle warranty is terminated. The addition of certain parts may change the handling of the vehicle, including (but not limited to) mowers, sledges, tires, sprayers, or large luggage racks.

PASSENGERS

Do not carry passengers unless you have operated the vehicle for at least two hours and have completed the new operator driving instructions outlined on page 59. Passengers must always sit in the passenger seat with the seat belt secured. Carrying more than one passenger in a two-seater vehicle affects the operator's ability to operate and operate control, increasing the risk of loss of control and accidents or rollovers. You cannot carry more than one passenger in a two-seater vehicle.

CONTACT EXHAUST

Engine exhaust is toxic and can cause loss of consciousness or death in a short time. Do not start or run a motor in a closed space. The engine exhaust of this product contains chemicals that cause cancer, birth defects or other reproductive damage, and you can only drive it outdoor or in a well-ventilated place

FUEL SAFETY

Gasoline is very flammable under certain conditions

- You must be extremely careful when handling gasoline.
- When refueling, the engine must be shut off and must be done outdoors or in a well-ventilated area.
- No smoking, no open flames or sparks at or near the refueling or gasoline storage location.
- Do not overflow when refueling. Do not fill the tank to the filler neck.
- If gasoline gets on your skin or clothes, wash them with soap and water immediately and change clothes.

SAFETY BELT

Driving without a safety belt increases the risk of rolling over, losing control, other accidents, or serious injury during a sudden stop. In such cases, seat belts reduce the severity of injuries and all drivers must wear them at all times.

CAB DOOR

Driving in this vehicle without closing and locking the cab door increases the risk of serious injury or death in the event of an accident or a rollover. Always ensure that all cab doors are closed and locked while the vehicle is in operation. The cab door should not be used as a handrail. Always keep hands and feet in the car

LOADING THE VEHICLE

The weight of cargo and passengers affects the running and stability of the vehicle. For your own safety and the safety of others, think carefully about your own safety. Vehicle loading and how to operate the vehicle safely. Follow the instructions in this manual for loading, tire pressure, gear selection and speed.

- The maximum weight capacity of the vehicle is listed in the instruction section of this manual and on the vehicle label. As more passenger weight is added, the cargo weight may need to be reduced accordingly. Do not exceed the vehicle's weight capacity.
- Recommended tire pressures are listed in the instruction section of this manual and on the vehicle label.

Always follow the following guidelines:

conditions:	steps:
Passengers and/or cargo exceeding half of the maximum weight capacity	1. Driving slowly. 2. Confirm tire pressure. 3. Be very careful when operating.
Operate over rough terrain	
Climb over obstacles	
Climbing	
Traction	

PASSENGERS IN THE CARGO COMPARTMENT

Loading passengers in the cargo compartment may cause the vehicle to fall or crash, which may result in passenger injury or more serious accidents. Never allow passengers to sit in the cargo compartment. Passengers must sit in the passenger seat with the seat belt secured.

OPERATING ON PAVEMENT

The vehicle's tires are designed for off-road use, not for road use. Operating the vehicle on paved surfaces (including pavements, footpaths, car parks and lanes) may adversely affect the handling of the vehicle and may increase the risk of loss of control and an accident or rollover. Avoid operating vehicles on the road. If it is unavoidable, drive slowly to avoid swerving or stopping.

TRANSMISSION HEATING

When the transmission has high oil temperature (oil temperature warning light on, insufficient power) on mountain roads, slopes, or under heavy loads, the driver needs to stop the vehicle to cool it down and go to a dealer shop for inspection and repair as soon as possible.

BRAKE SYSTEM HEATING

After continuous braking, the brake disc may overheat. Allow the brake disc to cool before use. Never touch an overheated brake disc as this may burn your skin.

PUBLIC ROAD OPERATION

Operating this vehicle on public streets, highways or freeways may result in a collision with another.

Do not operate this vehicle on any public street, road or highway, including dirt and gravel roads (unless designated for off-road use).

OVERSPEED

Running the vehicle at excessive speed increases the risk loss of control. Always operate at a speed suitable for the terrain, visibility and operating conditions, skills and experience.

TURNING

Improper steering can result in loss of traction, loss of control, accidents, or cartwheels. Correct procedures must be followed as described in this manual. Avoid sharp turns. Don't turn when using a heavy throttle. Don't make a sudden turn. Practice turning at lower speeds before trying to turn faster。

JUMPING AND STUNTS

Exhibition driving increases the risk of an accident or rollover. DO NOT do power slides， “donuts”， jumps or other driving stunts. Avoid exhibition driving.

INCORRECT MOUNTAIN CLIMBING

Improper climbing can lead to the danger of losing control of a vehicle or rolling over. Be extra careful when driving in the mountains. Appropriate procedures for climbing shall be followed in accordance with the methods described in this manual. See page 65.

DOWN THE HILL

Improper downhill maneuvers can result in the loss of control or rollovers. Follow the correct descent procedure as described in this manual. See page 66.

SIDE HILL

Driving on hills is not recommended. Improper operation may cause the vehicle to lose control or turn over. Don't go over any hill unless absolutely necessary. If crossing a hillside is inevitable, follow the appropriate procedure described in this manual. See page 66.

VEHICLE DEVICE

VEHICLE ACTIVATION.....19
VEHICLE UNLOCK..... 20
APP FUNCTION..... 20
CONTROL PARTS 21
IGNITION LOCK/START-STOP BUTTON 22
EPS MODE SWITCH 23
HIGH AND LOW BEAM SWITCH 23
TURN SIGNAL SWITCH (IF EQUIPPED) 23
HORN SWITCH..... 23
DRIVE MODE SWITCH..... 24
OVERRIDE 24
EPB SWITCH（ELECTRICAL PARK BRAKE）..... 25
EMERGENCY SWITCH 26
2WD AND 4WD SWITCH..... 27
GEAR LEVER/PARKING BUTTON 28
GEARSHIFT LEVER..... 29
BRAKE AND ACCELERATOR PEDALS 30
INSTRUMENT PANEL..... 32
INSTRUMENT INDICATOR LIGHT/WARNING LIGHT..... 33
INSTRUMENT SETTING BUTTONS..... 37
VEHICLE EQUIPMENT 38
WINCH SWITCH SOCKET..... 38
SEATS ADJUSTMENT 39
SEAT REMOVAL AND INSTALLATION..... 39
STEERING WHEEL ADJUSTMENT..... 40
CUP HOLDER 40
SEAT BELT 41
CAB DOOR 43
PASSENGERS ARMREST 44
GLOVE BOX 44

VEHICLE DEVICE

TOOL KIT 45
FUEL FILLER 45
FRONT INSPECTION COVER..... 46
CARGO DOOR 46
ROLLOVER PROTECTION SYSTEM(ROPS)..... 47
SUSPENSION ADJUSTMENT GUIDE (TYPE A)..... 48
SUSPENSION ADJUSTMENT GUIDE (TYPE B)..... 52
SPECIAL PROCEDURES..... 55
MECHANICAL PARKING GEAR RELEASE 55
ROLLOVER VEHICLE 56
VEHICLE IMMERSION 56

VEHICLE ACTIVATION

This vehicle is equipped with a T-BOX system for you. T-BOX is used to communicate with the background system and mobile phone APP, so that you can obtain vehicle information and control vehicle functions through the mobile phone APP.

In order to help you quickly become familiar with and use the system, please read the owner's manual carefully to understand the relevant operating information.

NOTICE

Vehicle is equipped with T-BOX, the new vehicle must be activated on the APP for the first time. If the activation operation is not performed, vehicle will not be able to use Internet of Vehicles.

First, search and download the "Segway powersports" APP from the "Apple® App Store®" or "Google Play® store" on your mobile phone, and activate the vehicle through the APP.

After the APP is successfully installed, register and activate the vehicle. First, find the VIN code on the vehicle and register on the APP. The registration procedure is as follows:

1. Power on the vehicle with the mechanical key.
2. Scan the barcode on the vehicle or manually enter the vehicle VIN code according to the APP registration prompt, and step on the vehicle brake at the same time.

NOTICE

The scanning may fail due to the influence of light. You can try to enter the VIN code manually. The vehicle VIN code is on the vehicle frame or on the nameplate.

3. lick Confirm to successfully bind.
4. Click to start using the vehicle.

VEHICLE UNLOCK

There are three ways to unlock the vehicle:

1. **Mechanical key (preferred).**
2. **APP remote unlock switch**

APP remote unlocking is based on 4G network. As long as the area is covered by the network, you can use the remote unlocking function in the APP to unlock the vehicle. The validity period of a single mobile phone operation remote unlocking is 3 minutes. Within 3 minutes, pressing the vehicle start-stop switch will power on the vehicle. If you step on the brake and press the start-stop switch, it will power on and start the engine.

3. APP BLUETOOTH SENSOR UNLOCKING

When both the vehicle's Bluetooth and the phone's Bluetooth are turned on and within the effective connection distance of the Bluetooth signal, the vehicle's Bluetooth module automatically unlocks after obtaining the phone's Bluetooth signal. Press the vehicle's start-stop button to power on the vehicle. If you step on the brake and press the start-stop button, start the engine.

NOTICE

After using remote unlocking or Bluetooth unlocking to power on the vehicle through the start/stop button, you must power off the vehicle by pressing the vehicle start/stop button. The vehicle cannot be powered off automatically if the remote or mobile phone is far away.

Mechanical key unlocking is the preferred unlocking method for the vehicle. If you do not want to use the induction unlocking function, you can turn off the induction unlocking setting function in the APP.

APP FUNCTION

This APP is designed for users who own Segway off-road vehicles.

Main functions: driving control analysis, vehicle data analysis, etc.

CONTROL PARTS

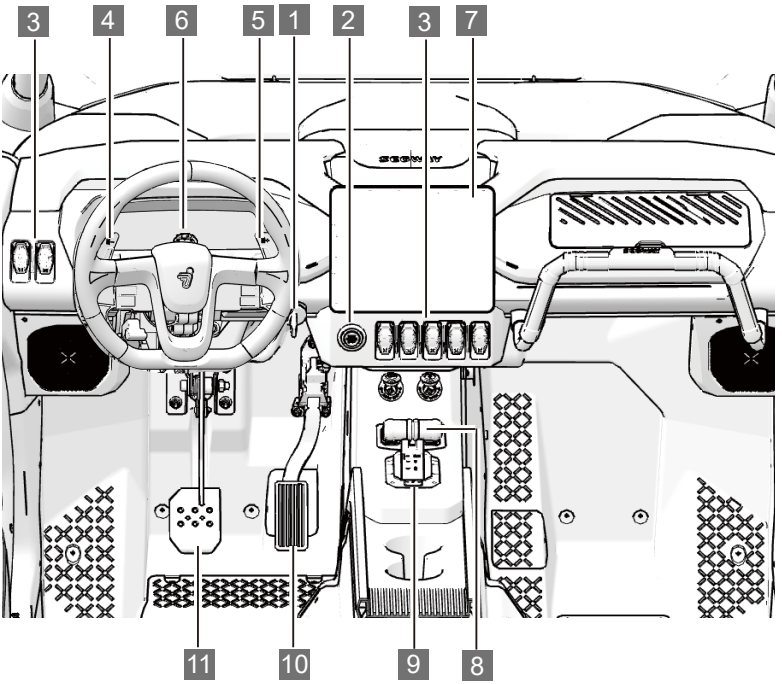

1 Ignition lock
2 Start/Stop Button
3 Switch button
4 Downshift lever
5 Upshift lever
6 Instuctment panel
7 Central control screen
8 Gear lever
9 Parking button
10 Accelerator pedal
11 Brake pedal

IGNITION LOCK/START-STOP BUTTON

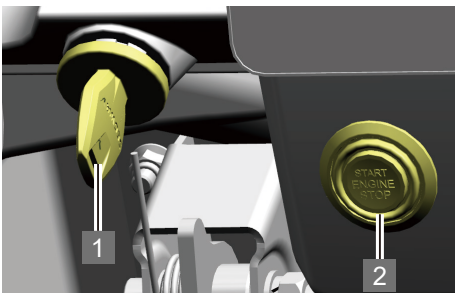

1 IGNITION LOCK

The key is turned to the "ON" position: the vehicle is powered on and the vehicle electrical parts can be used.

The key is turned to the "OFF" position: the vehicle circuit is disconnected and the engine is stopped. When the switch is in the off position, the key can be removed from the switch.

2 START/STOP BUTTON（START/STOP）

Start the engine

Turn the key to the "ON" position of the ignition lock switch, when the gear is in (N) or (P), step on the brake pedal and press the "Start/Stop Button" to start the engine.

⚠ CAUTION

If the engine fails to start, try again after 30 seconds, otherwise the starter may be damaged.

Engine stall

When the engine is running and the vehicle speed is less than or equal to 5km/h, press the "Start Stop Button" to stop the engine.

Emergency engine shutdown: When the engine is running and the vehicle speed is greater than 5km/h, press the "Start Stop Button" for more than 3s to stop the engine.

HIGH AND LOW BEAM SWITCH

This switch is used to select low beam or high beam of the headlights.

Press the button all the way up to turn on the high beam.

Press the button all the way down to turn on the low beam.

HORN SWITCH

To activate the horn, press the switch.

TURN SIGNAL SWITCH (IF EQUIPPED)

⇦ Press the switch to this position and the left turn signal is on. The corresponding icon on the meter is lit at this time.

⇨ Press the switch to this position and the right turn signal is on. The corresponding icon on the meter is lit at this time.

- Turn off the turn signal in the middle.

EPS MODE SWITCH

The power steering device (EPS) can provide the driver with easy steering assistance. Press the EPS mode switch down to switch between the three modes of the EPS system. Each press of the mode switch will switch the EPS mode in turn, and the instrument will have the corresponding EPS mode display:

- Standard mode. The instrument shows "M" in this mode.

- Comfort mode, light steering. The instrument shows "H" in this mode.

- Sport mode, heavy steering. The instrument shows "L" in this mode.

DRIVE MODE SWITCH

The driving mode switch can be used to select the vehicle's driving mode. There are three driving modes to choose from. Each time the mode is pressed, it switches in sequence. The instrument displays the current driving mode and switches to the UI or color of the current driving mode. The ambient light module switches to the ambient light color in the current mode:

- Standard mode: This mode provides maximum comfort, and the instrument displays "NORMAL".

- Racing mode: This mode provides more flexible throttle response, and the engine always maintains high power output. The instrument displays "RACE".

- Climbing mode: This mode provides maximum traction and low-speed performance, and the instrument displays "CLIMB".

NOTICE

This mode can only be switched in N gear, P gear, D1/M1, D2/M2)

OVERRIDE

The override switch is used for the following functions:

Bypass the engine speed limiter to enable maximum engine torque when the vehicle is in 4WD lock mode. (Remove the 24KM/h maximum speed limit when 4WD is locked)

⚠ WARNING

Use Power Boost only if the vehicle is stuck in mud or other soft terrain where there is insufficient force to get out. Make sure the area is safe before using Power Boost. Never use Power Boost during normal driving. This can result in excessive speed.

EPB SWITCH（ELECTRICAL PARK BRAKE）

PARKING BRAKE ON

When the vehicle is stationary or the speed is less than 3KPH, the parking brake can be activated. The parking brake function can be activated in the following two ways：

Manual opening: The driver presses the EPB switch in the "Ⓟ" direction to open the parking.

Automatic opening: The parking can be automatically opened by the driver by performing any of the following operations:

- When the driver operates the gear shifter from the “D” gear or the “R” gear to the “P” gear
- The driver turns off the ignition key switch and power off the vehicle.

⚠ CAUTION

When the vehicle speed is high, the parking brake will not be activated regardless of any operation. In special circumstances, the EPB electronic parking brake can be used as an emergency braking system to slow down the vehicle.

PARKING BRAKE RELEASE

When the parking brake is on, the driver can release the parking brake by pressing the brake pedal and performing any of the following operations at the same time:

Manual release: The driver presses the EPB switch in the "●" direction to release the parking brake.

Automatic release: The driver can automatically release the vehicle by performing any of the following operations:

- The driver operates the gearshift from the “P” gear to the “D” gear or “R” gear;
- In “D” or “R” gear, press the accelerator pedal. When the driving force is large enough (enough to overcome the gravity of the slope)

DYNAMIC BRAKING

In special circumstances (such as failure of the hydraulic brake system or damage to the brake pedal, etc.), the EPB electronic parking brake can be used as an emergency braking system to slow down the vehicle. The driver only needs to press the EPB switch in the " (Ⓟ) " direction, and the parking brake system will gradually increase the braking force to slow down the vehicle. When the vehicle speed is lower than 3KPH, the caliper will be locked for parking.

During dynamic parking, press the EPB switch toward the "●" direction and the parking brake will be released automatically.

EMERGENCY SWITCH

Use this switch when the vehicle is in an emergency. Press the switch to the " ⚠ " position, the emergency light turns on, and the vehicle position light flashes, and press the switch to the "●" position to turn off the emergency light.

" ⚠ ": Emergency light on.

" ● ": Emergency light off.

Use this switch when the vehicle is in an emergency

- Temporary parking of vehicles
- The vehicle is malfunctioning.
- The vehicle encounters other emergencies.

2WD AND 4WD SWITCH

Your vehicle is equipped with a 2WD/4WD switch, which allows selection between 2WD and 4WD driving modes, you can choose the driving mode that suits your riding.

⚠ CAUTION

The vehicle must be stopped to engage or release the 2WD/4WD switch.

TWO-WHEEL DRIVE MODE

Switch the key switch to " ", and the two-wheel drive symbol " " will be displayed on the instrument. At this time, in the two-wheel drive mode, the vehicle is only rear-wheel driven, and there is no power output to the front wheels.

FOUR-WHEEL DRIVE MODE

Switch the key switch to " ", and the four-wheel drive symbol " " will be displayed on the instrument. At this time, it is working in four-wheel drive state, with power output to the front wheels and power output to the rear wheels. This mode is suitable for bad roads such as muddy and mountainous areas.

FOUR-WHEEL DRIVE LOCK MODE

Switch the key switch to "", and the four-wheel drive lock symbol " " will be displayed on the instrument. At this time, it is working in the four-wheel drive lock state, with power output to the front wheels and rear wheels, and the left and right tires of the front wheels output the same speed and power. In the four-wheel drive lock state, the vehicle will be in a speed limit state, and the speed will not exceed 24km/h. This mode is only suitable for vehicle escape (the speed limit can be lifted while pressing the boost switch).

⚠ WARNING

In four-wheel drive lock mode, the four wheels rotate at the same speed, making it difficult for the vehicle to steer. Use this mode with caution.

GEAR LEVER/PARKING BUTTON

The shift handle is located on the lower console.

The shift lever is used to change the position of the gearbox.

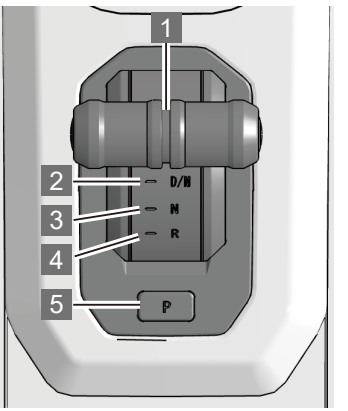

1 **Shift lever**

2 **M Manual mode / D Automatic mode**

3 **N Neutral** 4 **R Reverse gear**

5 **Parking**

When changing gears, hold the shift handle firmly and move it forward or backward to the corresponding gear position.

"D" AUTOMATIC MODE (FORWARD)

The engine automatically selects the gearbox gear according to the vehicle speed and throttle signal

"M" MANUAL MODE (FORWARD)

After entering this gear, the driver uses the shift lever to select the appropriate gear.

"N" NEUTRAL

The gearbox can be released in the neutral position.

"R" REVERSE GEAR

The reverse position enables the vehicle to move backwards.

NOTICE
When reversing, the engine speed is limited, thus limiting the vehicle's reversing speed. **If reversing downhill, gravity can increase the vehicle's speed beyond the set reversing speed limit.**

"P" PARKING GEAR

The Parking gear locks the gearbox to prevent the vehicle from moving.

⚠ WARNING

Always use the PARK (P) gear when the vehicle is not moving. The vehicle may move if not set in the PARK (P) gear.

GEARSHIFT LEVER

The gearshift lever are located behind the steering wheel.

The gearshift lever can only be used to change gears when manual mode (M position) is selected.

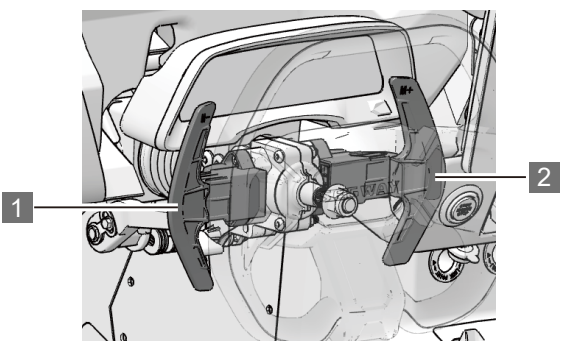

1 **Left downshift lever** 2 **Right upshift lever**

QUICK SHIFT MODE

In manual mode, the shift lever are activated.

Pressing the right (upshift) or left (downshift) lever will select the next higher gear or the previous gear.

Right shift lever (upshift) gear: M1→M2→M3→M4→M5→M6→M7. The gear can be displayed on the instrument.

Left shift lever (downshift) gear: M7→M6→M5→M4→M3→M2→M1, the gear can be displayed on the instrument.

The current gear will be maintained until an upshift or downshift speed is reached.

To exit quickshift mode and return to fully automatic mode, push the shift lever forward to shift into automatic mode (D gear).

BRAKE AND ACCELERATOR PEDALS

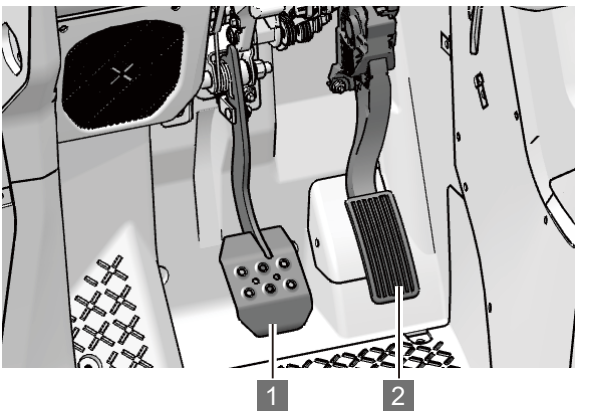

1 **Brake pedal** 2 **Accelerator pedal**

BRAKE PEDAL

You can slow down or stop the vehicle when you press the brake pedal. Use the brakes when you start the engine.

To slow down or stop the vehicle, press the brake pedal with your right foot.

ACCELERATOR PEDAL

Push the accelerator pedal down to increase speed.

To increase or maintain speed, hold the accelerator pedal with your right foot.

To slow down, release the accelerator pedal.

The accelerator pedal is spring loaded and should return to the balanced position (idle) when not pressed.

When released, spring pressure returns the pedal to its rest position. Always check that the accelerator pedal returns properly before starting the engine.

⚠ WARNING

Do not apply the accelerator pedal and brake pedal simultaneously, or the gearbox will be damaged seriously.

INSTRUMENT PANEL

The instrument provides the operator with vehicle operating parameter information. The driver should understand the meaning of various indicator lights, warning lights and displayed content information on the instrument so as to understand the vehicle status in a timely manner.

NOTICE
Using a high-pressure cleaner may damage the instrument. Do not use alcohol or corrosive detergents to clean the instrument, as corrosive liquids will corrode the instrument surface and cause damage to the instrument.

INSTRUMENT INDICATOR LIGHT/WARNING LIGHT

The vehicle may be equipped with different instruments with slightly different display status or display area, subject to the actual vehicle instrument.

When the ignition lock switch is in the "ON" mode, the instrument is turned on and all warning lights on the instrument will light up briefly.

INSTRUMENT INDICATOR LIGHT/WARNING LIGHT

Main interface 1

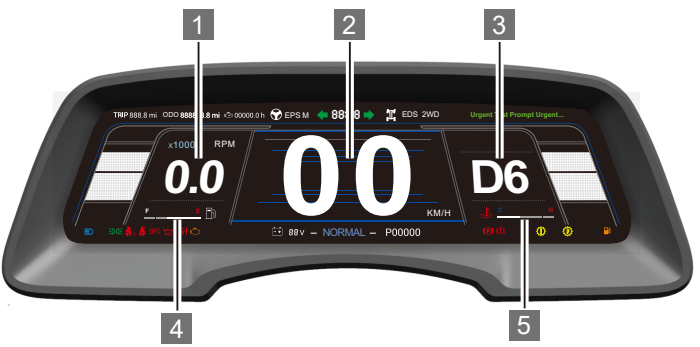

Main interface 2

1 Engine tachometer

Displays the real-time vehicle speed. (Displayed value × 1000 is the engine speed)

2 Speedometer

Displays the vehicle's real-time speed.

3 Gear display

R：Reverse **N**：Neutral **P**：Parking gear
M（**1~7**）：Manual mode **D**（**1~7**）：Automatic mode

4 Oil level indicator

E：Low fuel **F**：Full fuel

Displays the fuel level in the fuel tank. When the fuel level drops to the warning point, the fuel warning light will light up and you should refuel immediately.

5 Engine water temperature gauge

C：Low water temperature **H**：High water temperature

Displays the engine temperature. When the engine coolant temperature reaches the warning point, the water temperature warning light will light up, please turn off the engine.

Light	Instructions	Status
Turn light (if equipped)		Turn on the turn signal switch or emergency light switch, and the indicator light will turn on and flash
High Beam		This lamp illuminates when the headlamp switch is set to high beam
Driving Lights		The front light, tail light, license plate light and instrument panel light are on
Check Engine		This indicator appears if an EFI-related fault occurs. Do not operate the vehicle if this warning appears. Serious engine damage could result.

Oil Pressure Warning		This light is on when oil pressure is too low
Fuel level		The lamp lights up when the fuel level is too low
Off-seat alarm (if equipped)	OPC	When the driver leaves his seat, the vehicle speed is “0” and the parking brake is not applied, the OPC indicator lights up and the buzzer sounds
Parking Brake		This indicator lights up (red indicator) when park gear is used. (Optional equipment, if equipped with EPB)
		EPB module offline (yellow indicator). (Optional equipment, if equipped with EPB)
Brake System		• Low brake fluid level • The braking system is faulty
EPS System		Indicates a failure in EPS system (optional equipment, if equipped)
Coolant temperature warning lamp		Indicator light showing excessive temperature of engine coolant. When it lights up and alarms, the engine should be stopped immediately and shut down. After cooling down to normal temperature, the engine should continue to run
Seat belt indicator		This light reminds the operator to ensure that all riders wear helmets and safety belts before work. The driver's seat belt is equipped with a seat belt interlocking device. If the seat belt is not secured, the vehicle speed will be limited to 15 MPH (24 km/h)

Transmission fault		This indicator lights up in the event of a transmission malfunction
Transmission overheating		This indicator lights up when the transmission temperature is too high
Subtotal Mileage	TRIP **888.8** kmi	Sub-total mileage can also be cleared through the Instrument setting buttons
Engine running time	**888.8** h	Display engine running time
Fault code display	P00000	In case of partial failure of the vehicle, the fault code is displayed in this area
Battery voltage	00.0 V	Displays the current voltage of the vehicle battery
Battery alarm		When the engine is not started or when the voltage is lower than 9V or higher than 16.3V, the indicator lights up (red indicator)
Total Mileage	TOTAL 88888 kmi	Display the total mileage accumulated by the vehicle
Four-wheel drive full differential lock		" " TWO-WHEEL DRIVE MODE " " FOUR-WHEEL DRIVE MODE " " FOUR-WHEEL DRIVE LOCK MODE
Diver mode	NORMAL RACE CLIMB	NORMA-Standard mode RACE-Racing mode CLIMB-Climbing mode
EPS On (Only brushless EPS is supported)	EPS	EPS **M**-Normal mode, power normal EPS **H**-Comfort mode, power light EPS **L** -Motion mode, booster weight

INSTRUMENT SETTING BUTTONS

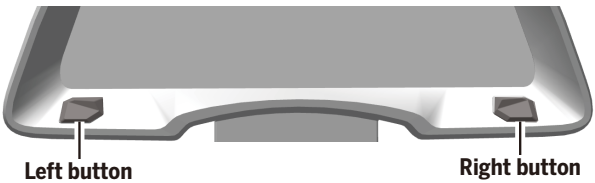

Function	Display	Left button	Right button	Display after action
Brightness adjustment	Main interface	Short press		Adjust backlight brightness (default brightest)
Subtotal clear	Main interface	Long press		Zeroing of subtotal mileage
topic switching	Main interface	Short press	Short press	Next topic
Metric or imperial units	Main interface		Short press	Metric and Imperial switching
chinese and english switching	Main interface		Long press	Short press left and right buttons at the same time to switch language (default english)
Clock settings (This function is not available when the vehicle has a T-BOX)	Main interface	Long press	Long press	Clock hour blinking
			Short press	Clock hour +1
			Long press	Clock hour continuous +1
		Short press		Clock minute blinking
			Short press	Clock minute +1
			Long press	Clock minute continuous +1
		Short press		Exit Clock
		or 15S without operation		

VEHICLE EQUIPMENT

12V DC SOCKET

The power socket can be used for accessories with working current less than 12V/10A.

Conditions for use of power sockets:

When the ignition lock is in "ON" mode.

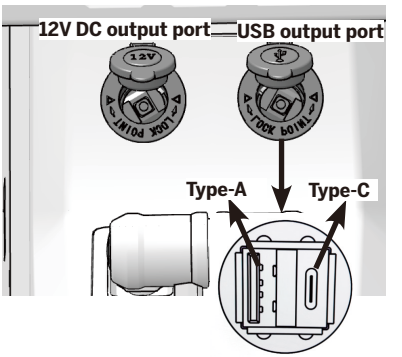

USB OUTPUT PORT

Input voltage: DC 8V~16V

Type-A output 5V/2.4A,

Type-C output 5V/2.4A

WINCH SWITCH SOCKET

The vehicle is equipped with a winch switch socket, which located at the lower left of the co-pilot.

The winch switch socket is used to control the winch operation after connecting with the winch controller. (See page 79)

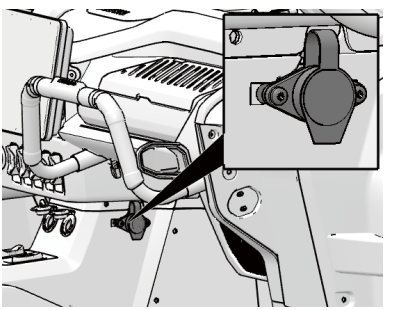

POWER DISTRIBUTOR

The vehicle is equipped with a power distributor, located under the front maintain cover.

The power distributor can be used for some newly added electrical products in the vehicle, such as wipers, audio, etc.

Fuse：40A

Maximum power：150W

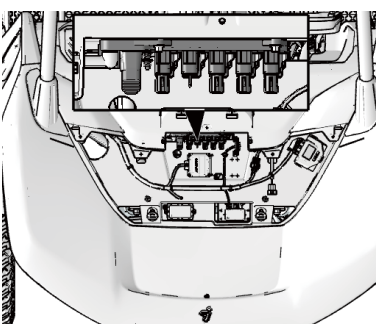

SEATS ADJUSTMENT

The vehicle is equipped with an adjustable seat. The driver or passenger can adjust the seat according to the comfort level before starting the vehicle. The seat should be adjusted so that the driver's back fits the seat back and the driver's feet can step on the brake pedal and accelerator pedal.

SEAT FRONT AND REAR POSITION ADJUSTMENT

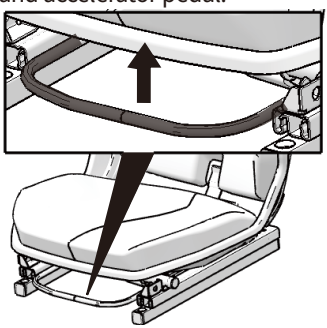

There is a U-shaped adjustment rod at the front end of the seat. Pull the U-shaped adjustment rod upward and hold it to slide the seat forward or backward to the desired position. Release the U-shaped adjustment rod. The seat will be locked in the new position.

SEAT REMOVAL AND INSTALLATION

REMOVAL

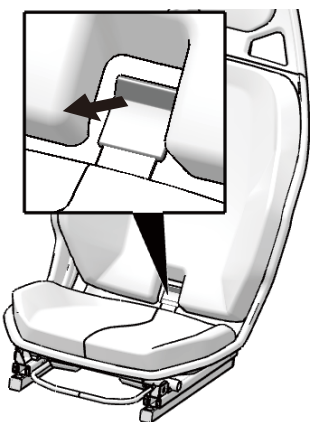

Press the handle behind the seat forward to disengage the fixing hook under the seat from the fixing slot.

If there is a wiring harness under the seat, unplug it.

Lift the seat upward and remove it from the vehicle.

INSTALLATION

1. If there is a wiring harness, plug the wiring harness connector under the seat.
2. Insert the two slots at the front of the seat into the round tube.
3. Press the back of the seat upwards until you hear a "click".
4. After installation, check whether the seat is installed properly to ensure the safety of the driver and passengers.

STEERING WHEEL ADJUSTMENT

The steering wheel is angle-adjustable and telescopically adjustable to suit the driver's driving preferences.

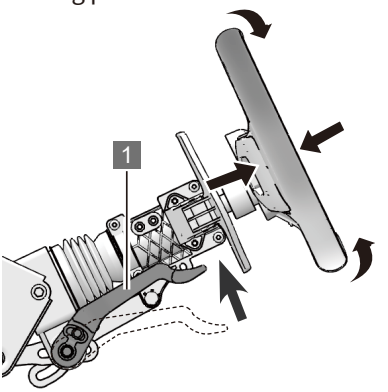

1 **Adjustment lever**

1. Adjust the seat position.
2. Move the adjustment lever downward.
3. Move the steering wheel to the desired position.
4. Hold the steering wheel in this position and raise the adjustment lever to lock the mechanism in place.
5. Try moving the steering wheel up/down/forward/backward to confirm that the steering wheel is securely locked.

⚠ WARNING

Never adjust the steering wheel while driving. Otherwise, you may lose control.

CUP HOLDER

The vehicle offers two cup holders, both located in the lower dashboard.

NOTICE

Do not use the cup holders when driving in uneven conditions.

SEAT BELT

Fasten your seat belt immediately after getting in the car. Seat belts can effectively protect the personal safety of the driver and passengers. When the vehicle encounters an accident, seat belts can reduce injuries to people in the vehicle. Please wear seat belts correctly and follow the steps below:

DRIVER'S SEAT BELT

Driver's seat belt is a four-point retractable seat belt with a seat belt adjuster.

1. Wear the left and right seat belts on both shoulders.

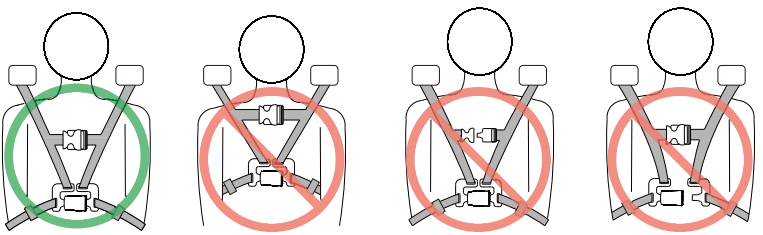

correct **too high** **Upper unlocked** **Lower unlocked**

2. Push the upper and lower latch plates into the upper and lower buckles respectively until they click.
3. You can adjust the seat belt to fit closely to your body by pulling the belt inwards through the retractor above the shoulder or the adjustment straps on both sides below.
4. Press the release locks of the upper and lower buckles to release the seat belt.

PASSENGER SEAT BELTS

The passenger seat belt is a four-point harness type seat belt. Pull the seat belt inward or outward through the adjustment straps on both sides to adjust the length of the seat belt so that it fits the body tightly.

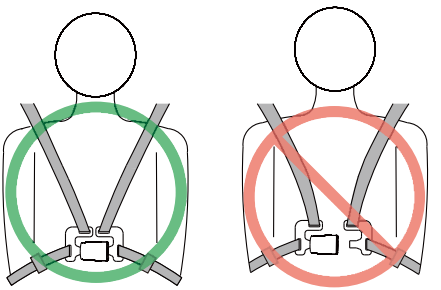

NOTICE

Before each use, check all seat belts for proper operation.

- **Push the latch plate onto the buckle until it clicks. The latch plate must slide smoothly into the buckle.**
- **Pull each seat belt out and inspect it for any damage, including cuts, wear, abrasions, or strength. If any damage is found, or if the belt does not operate properly, contact your Segway Dealer for a replacement.**
- **To clean dirt or debris from the seat belts, wipe the straps with mild soap and water. Do not use bleach, dyes, or household detergents.**

CAB DOOR

This vehicle is equipped with cab doors. Always ensure all cab doors are closed and locked when operating this vehicle.

⚠ WARNING

Riding in this vehicle without the driver's door closed or locked will increase the risk of serious injury or death in the event of an accident or rollover.

Always inspect doors and latches for wear and damage before each use.

Promptly replace any worn or damaged parts, new parts can be purchased from your authorized Segway dealer.

OPEN/CLOSE CAB DOOR

The door latch is located on the inside front side of the door and the door is opened by pulling the latch bar.

Pull the door inwards and it will close when you hear a "click". After closing, check whether the door is locked.

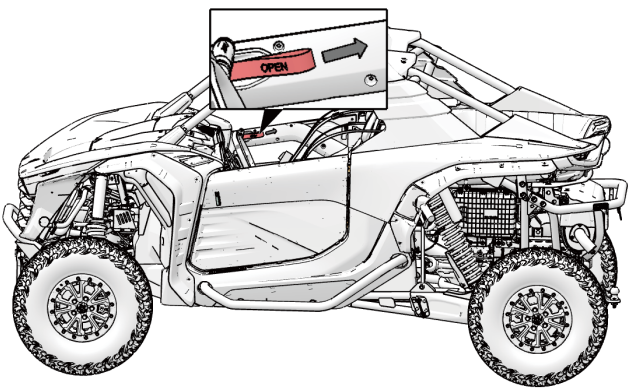

PASSENGERS ARMREST

At passenger seat there will be a armrest under the control panel.

For passenger safety, please let passenger tight the armrest after vehicle ignited.

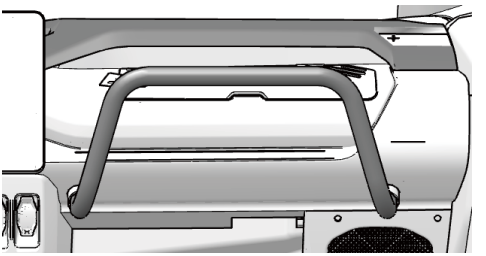

⚠ WARNING

Do not use any part of the roll cage as a handrail. Your hands could be hit by objects outside the cabin or crushed in a rollover.

GLOVE BOX

The vehicle is equipped with a closed glove box for carrying lighter items (less than 5 Kg).

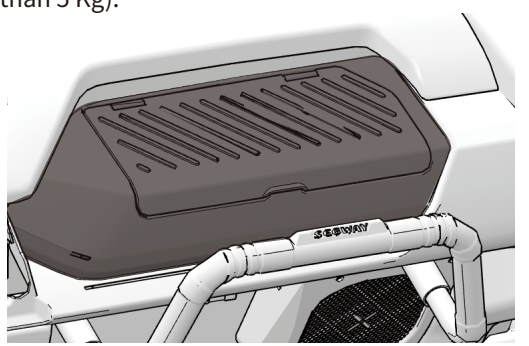

TOOL KIT

A tool kit with basic tools is available and is located in the glove box.

FUEL FILLER

⚠ WARNING

- **Always fill the vehicle with the type of fuel specified for the vehicle.**
- **Do not smoke while filling the vehicle with fuel, as this may ignite the fuel and cause a fire.**
- **Do not touch other people or objects with static electricity, as this may cause static electricity to build up and ignite the fuel.**
- **Do not spill the fuel while filling.**

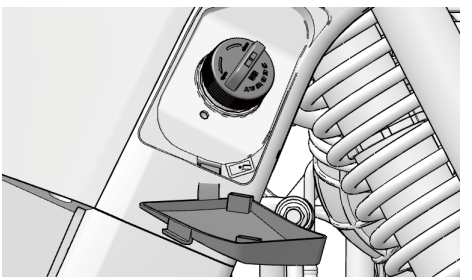

1. Pull open the fuel tank decorative cover.
2. Unscrew the fuel tank cap in the direction of "OPEN" (see the direction mark on the fuel tank cap).
3. Refuel the vehicle (do not overfill).
4. Tighten the fuel tank cap in the direction of "CLOSE" and close the fuel tank cap.

FRONT INSPECTION COVER

The knobs on both sides of the inspection cover can quickly open the front inspection cover. The power distributor, T-BOX, BCM, antenna combination, winch relay, etc. are located below.

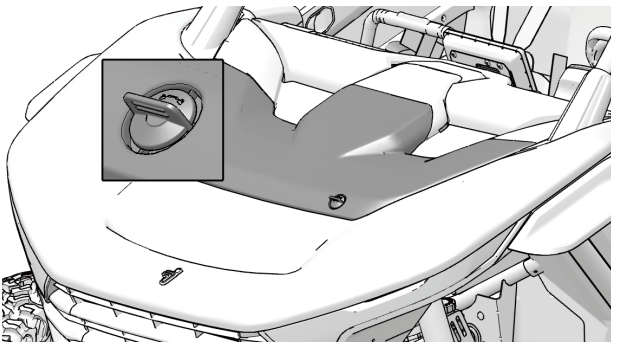

CARGO DOOR

The cargo door can be quickly removed. At the same time, grab both cargo box door panel handles and lift the cargo box door upwards to remove it

⚠ CAUTION

Before starting the drive, ensure that the cargo door is installed in place.

ROLLOVER PROTECTION SYSTEM(ROPS)

The vehicle's Rollover Protection System (ROPS) meets the rollover performance requirements of (EU) No 1322/2014 Annex VIII. If the vehicle's Rollover Protection System is damaged in any way, contact a Segway dealer to While no device can guarantee the protection of occupants in a rollover accident, when used in conjunction with seat belts, cab nets or doors, ROPS helps prevent occupants from being ejected from the vehicle. Always follow all safe operating procedures outlined in this manual to avoid a vehicle rollover.

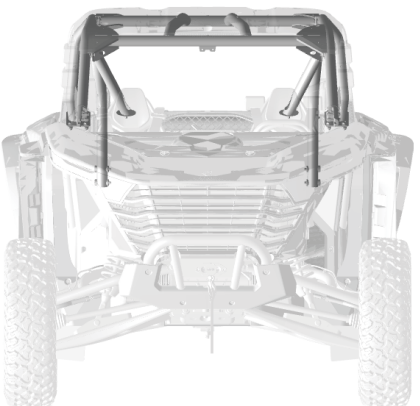

⚠ WARNING

Vehicle rollover could result in serious injury or death. Avoid operating in a manner that could cause the vehicle to roll over.

SUSPENSION ADJUSTMENT GUIDE (TYPE A)

The handling and comfort of the vehicle depend on the adjustment of the suspension.

Suspension tuning choices vary with vehicle load, personal preference, driving speed, and terrain conditions.

The spring adjustment nut of the gas pressure damping shock absorber is at the upper end of the spring. Use a crescent wrench to loosen the lock nut. Then turn the adjustment nut to loosen it.

Adjust the nut position within the range shown below to achieve the desired comfort level.

The best way to set up your suspension is to start with the factory settings and then customize it one adjustment at a time.

Front and rear adjustments are related. For example, after adjusting the front shock absorbers, you may also need to readjust the rear shock absorbers.

Run the vehicle in at the same track, speed, load, etc. make an adjustment change and retest. Methodically make adjustments until you are satisfied.

A guide to fine-tuning your suspension is provided below.

Shock absorber adjustment position.

TAKE THE FRONT SUSPENSION AS AN EXAMPLE

1 **Compression damping (high and low speed)**

2 **Preload**

3 **Spring cross section**

4 **Rebound damping**

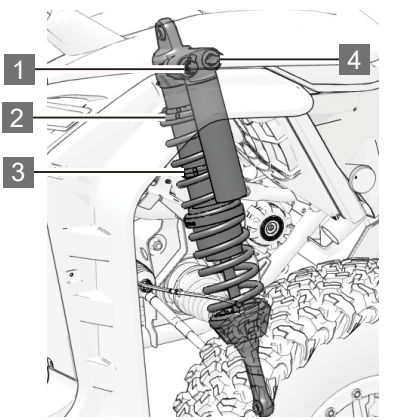

FRONT AND REAR SUSPENSION FACTORY SETTINGS

Item	Settings	Available range
Front shock absorber: Gas pressure adjustable damping shock absorber spring preload setting position (from the bottom of the upper mounting seat to the adjustment nut position)	32mm	12～53mm
Rear shock absorber: Gas pressure adjustable damping shock absorber spring preload setting position (from the bottom of the upper mounting seat to the adjustment nut position)	104mm	90～120mm
High-speed compression damping adjustment (adjustable on a scale)	3rd gear	1st～3rd gear
Low speed compression damping adjustment (adjustable on a scale)	4 gear	1st-8th gear
Restoration damping adjustment (adjustable by scale)	4 gear	1st-8th gear
Gas pressure	1Mpa	

SPRING PRELOAD ADJUSTMENT

On firmer surfaces and in uneven driving conditions or when carrying heavy loads, shorten the spring.

On softer surfaces and in smooth driving conditions, lengthen the spring.

⚠ WARNING

The left and right shock absorber adjustments of the front or rear suspension must always be set to the same position.

Never adjust the shock absorbers on only one side.

Uneven adjustment on both sides can result in poor handling and stability, which could lead to an accident.

Lift the vehicle. The spring length should be measured without any load on the wheel.

The spring length should be the same on both sides.

Loosen the locking ring and turn the adjuster ring as needed to make adjustments.

Loosen the locking ring and turn the adjuster ring as needed to make adjustments.

1 **Loosen the top locking ring**

2 **Turn the adjuster ring as necessary**

3 **Tighten the top locking ring**

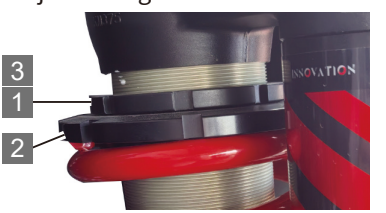

ADJUSTMENT SPRING CROSS SECTION

The dual compression ratio crossover point can be modified by adjusting the position of the turning ring. See your authorized Segway dealer.

Typical Example - Cross Adjustment - Rear Shock Absorber

A **Spring preload**

B **Turning ring position**

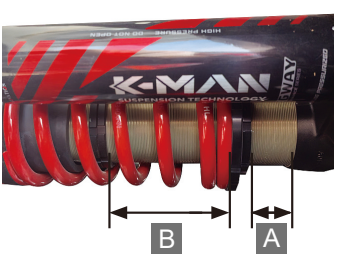

LOW SPEED COMPRESSION DAMPING

Low-speed compression damping controls how the shock reacts to low suspension speeds (slow compression stroke, most commonly when riding at low speeds).

The low-speed compression group can be adjusted by adjusting the compression group knob position:

1 **Adjustment knob**

Increase compression damping (become softer) from 1st gear (1→ 2→ 3→ 4→ 5→ 6→ 7→ 8) to 8th gear.

Reduce compression damping (harder) from 8th gear (8→ 7→ 6→ 5→ 4→3→2→1) to 1st gear.

HIGH SPEED COMPRESSION DAMPING

High-speed compression damping controls how the shock reacts to high suspension speeds (fast compression travel, most commonly found when riding at higher speeds).

High-speed compression damping can be adjusted by adjusting the handle position:

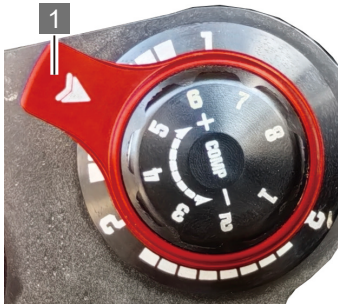

1 **Adjustment handle**

Increase compression damping (soften) from 1st gear (1→2→3) to 3rd gear.

Reduce compression damping (harder) from 3rd gear (3→ 2→ 1) to 1st gear.

REBOUND DAMPING

Adjust the rebound damping by adjusting the rebound damping knob:

1 **Rebound damping knob**

Increase rebound (softer), from 1st gear (1→ 2→ 3→ 4→ 5→ 6→ 7→ 8) to 8th gear.

Reduce rebound (harder) from 8th gear (8→7→6→5→4→3→2→1) to 1st gear.

SUSPENSION ADJUSTMENT GUIDE (TYPE B)

SHOCK ABSORBER ADJUSTMENT POSITION

Take the front suspension as an example.

1 **Low speed compression damping**

2 **High speed compression damping**

3 **Preload**

4 **Spring cross section**

5 **Rebound damping**

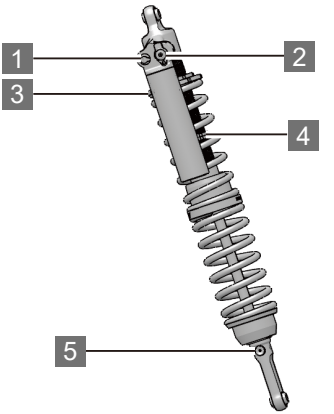

FRONT AND REAR SUSPENSION FACTORY SETTINGS

Item	Settings	Available range
Front shock absorber: Gas pressure adjustable damping shock absorber spring preload setting position (from the bottom of the upper mounting seat to the adjustment nut position)	32mm	12～53mm
Rear shock absorber: Gas pressure adjustable damping shock absorber spring preload setting position (from the bottom of the upper mounting seat to the adjustment nut position)	104mm	90～120mm
High-speed compression damping adjustment (adjustable on a scale)	3rd gear	1st～3rd gear
Low speed compression damping adjustment (adjustable on a scale)	4 gear	1st-8th gear
Restoration damping adjustment (adjustable by scale)	4 gear	1st-8th gear
Gas pressure	1Mpa	

SPRING PRELOAD ADJUSTMENT

The adjustment method is the same as (Type A) shock absorption.

LOW SPEED COMPRESSION DAMPING

Low-speed compression damping controls how the shock reacts to low suspension speeds (slow compression stroke, most commonly when riding at low speeds).

The low-speed compression group can be adjusted by adjusting the compression group gear position:

1 **Adjustment knob**

Increase compression damping (soften) from 1st gear (1 → 2 → 3 → 4 → 5 → 6 → 7 → 8) to 8th gear.

Decrease compression damping (harder) from 8th gear (8 → 7 → 6 → 5 → 4 → 3 → 2 → 1) to 1st gear.

HIGH SPEED COMPRESSION DAMPING

High-speed compression damping controls how the shock reacts to high suspension speeds (fast compression travel, most commonly found when riding at higher speeds).

High-speed compression damping can be adjusted by adjusting the gear position:

1 **Adjustment handle**

Increase compression damping (soften) from 1st gear (1 → 2 → 3) to 3rd gear.

Decrease compression damping (harder) from 3rd gear (3 → 2 → 1) to 1st gear.

REBOUND DAMPING

Adjust the rebound damping by adjusting the rebound damping knob:

1 **Rebound damping knob**

Increase rebound (softer), from 1st gear (1 → 2 → 3 → 4 → 5 → 6 → 7 → 8) to 8th gear.

Reduce rebound (harder) from 8th gear (8 → 7 → 6 → 5 → 4 → 3 → 2 → 1) to 1st gear.

SPECIAL PROCEDURES

MECHANICAL PARKING GEAR RELEASE

If a vehicle malfunction causes the shift mechanism to be unable to shift into (P) gear normally, the (P) gear must be released manually.

The speed shift shaft is located above the transmission. To release the mechanical (P) gear, perform the following procedure:

1. Select the flattest possible surface near the vehicle.
2. Have someone hold the brake pedal down during the entire process.

If this is not possible, block the wheels with rocks, wood or other suitable objects to prevent the vehicle from moving unexpectedly.

3. Use the shift wrench included in the tool kit to insert it into the "flat square" of the transmission shift shaft.
4. Turn the wrench clockwise until you hear a "click" sound, and the rotation angle should not exceed 40° to put the transmission gear in the (N) gear.

⚠ CAUTION

If the key of ignition switch is in "ON", after manually disengaging "P", turn the key to "OFF" and it will automatically go into "P" again.

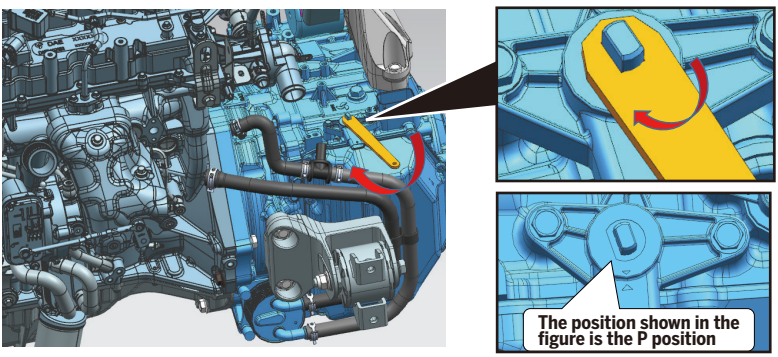

ROLLOVER VEHICLE

Sharp maneuvers, sharp turns, driving on a hillside, or an accident can cause the vehicle to roll over.

If the vehicle rolls over, it must be transported to an authorized Segway dealer for inspection as soon as possible. **DO NOT START THE ENGINE!**

After a rollover, the engine performs the following procedures:

1. Turn off the engine immediately after the vehicle rolls over.
2. Do not start the engine after the vehicle is straightened.
3. Check whether there is oil in the supercharger compressor inlet, intake pipe, intercooler, and intake system. If there is oil, clean it up.
4. Remove the spark plugs of each cylinder and use an endoscope to check whether there is oil in the combustion chamber. If necessary, start the engine to drain the oil in the combustion chamber from the spark plug hole. Run the engine several times and then check with an endoscope.
5. Check the engine peripheral parts for damage.

Other locations that need to be inspected include but are not limited to:

– Liquid levels of various liquids
– Check the air filter box and air filter for contamination
– Seat belts, including retractors, buckles and sliding locking tabs
– Roll cage and its mounting points
– Steering system
– Suspension and its mounting points.

VEHICLE IMMERSION

If the vehicle is submerged in water, it must be transported as quickly as possible to an authorized Segway dealer only.

⚠ CAUTION

Do not start the engine, as flooding the vehicle may cause serious engine damage if proper restarting procedures are not followed.

OPERATION

BASIC DRVING GUIDE 59

TRAIL ETIQUETTE 59

KNOW YOUR RIDING AREA/TREAD LIGHTLY 60

VEHICLE BREAK-IN PERIOD 60

BRAKE SYSTEM BREAK-IN PERIOD 60

BELT BREAK-IN PERIOD 60

NEW OPERATOR DRIVING PROCEDURES 61

DRIVING WITH PASSENGERS 62

START THE ENGINE 62

ENGINE FLAMEOUT 63

BRAKING 63

PARKING THE VEHICLE 64

DRIVING ON SLIPPERY SURFACES 64

DRIVING THROUGH WATER 65

DRIVING IN REVERSE 66

DRIVING OVER OBSTACLES 66

DRIVING UPHILL 66

DRIVING DOWNHILL 67

DRIVING ON A SIDEHILL (SIDEHILLING) 67

PARKING ON AN INCLINE 67

PARKING THE VEHICLE 68

ENGINE BREAK-IN GUIDELINES 68

OPERATION

PRE-RIDE INSPECTION **69**
HAULING CARGO **70**
GUIDE TO TRANSPORTATION OF GOODS 71
TOWING DEVICE (IF EQUIPPED) 72
MAXIMUM TOWING CAPACITY 73
TOWING LOAD 73

This section provides basic operating instructions, including how to start and stop the vehicle, driving skills and precautions when driving on different roadways.

Even if you've ridden other off-road vehicles, you must take time to familiarize yourself with how the vehicle operates. Practice in flat and wide areas until you are familiar with this all-terrain vehicle.

⚠ WARNING

Failure to inspect and verify that the vehicle is in safe operating condition before operating increases the risk of an accident. Always perform the Pre -Ride Inspection outlined in the Operation chapter before each use of your

vehicle to make sure it's in safe operating condition. Always follow the inspection and maintenance procedures and schedules described in this owner's manual. See the Periodic Maintenance section of the Maintenance chapter.

BASIC DRVING GUIDE

TRAIL ETIQUETTE

Always practice good etiquette when riding. Allow a safe distance between your vehicle and other vehicles operating in the same area. Communicate to oncoming operators by signaling the number of vehicles in your group. When stopping, move your vehicle to the edge of the trail as far as possible to allow others to pass safely.

KNOW YOUR RIDING AREA/TREAD LIGHTLY

Familiarize yourself with all laws and regulations concerning the operation of this vehicle in your area. Respect the environment in which you ride your vehicle.

Find out where the designated riding areas are by contacting your authorized Segway dealer, a local riding club, or local officials. Help keep our trails open for recreational vehicle use.

VEHICLE BREAK-IN PERIOD

Your vehicle's break-in period is the first 25 hours of operation or the riding mileage which used first two full tanks of gas. Careful handling of new engine and drive components will improve the performance and service life of these components. Follow these steps carefully.

BRAKE SYSTEM BREAK-IN PERIOD

In order to achieve the best braking performance, the brake must be not less than 124mi(200Km) break-In when use.

Heavy or excessive braking when using the new braking system may damage the brake pad and disc.

BELT BREAK-IN PERIOD

Proper break-in of the clutch and driving belt will ensure longer service life and better performance. Run the break-in clutch and belt at low speeds for the recommended break-in time, only pulling light loads. Avoid violent acceleration and high speed running during run-in. If the belt is broken, be sure to clean up the intake and outlet pipeline and any debris from the clutch and engine compartment during belt replacement.

NEW OPERATOR DRIVING PROCEDURES

1. Before operating this vehicle, read and understand the owner's manual and all warning and instruction labels.
2. Perform a pre-ride check.
3. Do not carry goods during this period.
4. Do not carry passengers until you have driven the car for at least two hours.
5. Choose a suitable and open area to familiarize yourself with the operation of the vehicle.
6. Safety helmets, eye protection, gloves, long-sleeved shirts, trousers, ankle boots and safety belts must be worn at all times.
7. When driving this car, make sure that all cab doors are closed and locked.
8. Sit in the driver's seat, fasten the seat belt, and put the transmission in the "P" position.
9. Depress the brake pedal.
10. Start the engine.
11. Place the transmission in (D).
12. Check your surroundings and determine your driving route.
13. Hold the steering wheel with both hands, slowly release the brake, depress the accelerator with your right foot, and start driving.
14. Drive slowly at first, and practice starting, stopping, turning, maneuvering, using the accelerator, brakes, and reversing on a flat ground. When learning how the vehicle operates, practice left and right turns at a slow speed.
15. When you make a turn proficiently and start to run at a faster speed, please observe the following precautions:

Avoid sharp turns

- **Don’t turn when stepping on the accelerator .**
- **Don’t swerve when driving the vehicle.**
- **Operate according to your skills conditions and terrain.**
- **Do not jump the vehicle or perform any other driving stunts.**

DRIVING WITH PASSENGERS

1. Finish the overview of the new operator driver on the page 59.
2. Pre-ride check. Please refer to the page 68.
3. Don't carry more than one passenger in a two-seat vehicle. The additional passenger will affect the operator's ability to drive and control the vehicle.
4. All riders must be able to sit with their backs on the seat, with their feet flat on the floor, and their hands on the steering wheel (if driving) or on the passenger armrest/grab bar.
5. The driver and all passenger must wear helmets, eye protectors, gloves,long-sleeved shirts, trousers, ankle boots and seat belts. Please refer to the page 11.
6. Ensure all cab doors are closed and locked when driving.
7. Passenger can only sit in the passenger seat when driving.
8. Slow down. Always travel at a speed appropriate for your skills, your passengers' skills and operating conditions. Avoid unexpected or aggressive maneuvers that could cause discomfort or injury to a passenger.
9. Vehicle handling may change with passengers and/or cargo on board. Allow more time and distance for braking.

START THE ENGINE

1. Place the vehicle outdoors or on a well-ventilated level surface.
2. Turn the ignition lock switch to the "ON" position.
3. When the gear is in (N) or (P), depress the brake pedal and do not release it.
4. Depress the brake pedal and press the START-STOP button to start the engine.

NOTICE

If the engine fails to start, wait 30 seconds before starting a second time or the starter motor may be damaged.

Allow the engine to warm up for a few minutes before operating the vehicle. Operating the vehicle immediately after starting may result in engine damage.

ENGINE FLAMEOUT

When the engine is running and the vehicle speed is less than or equal to 5km/h, press the “start/stop button” and the engine stops.

Emergency engine shutdown, engine running and speed greater than 5km/h, press the “start/stop button” for more than 3s, the engine stops.

BRAKING

1. Release the throttle pedal completely.

NOTICE

When the throttle pedal is released completely and engine speed slows to near idle, the vehicle has no engine braking.

2. Press on the brake pedal evenly and firmly.
3. Practice starting and stopping (using the brakes) until you’re familiar with the controls.

PARKING THE VEHICLE

1. Stop the vehicle on a level surface. When parking inside a garage or other structure, be sure that the structure is well ventilated and that the vehicle is not close to any source of flame or sparks, including any appliance with pilot lights.
2. Fully release the gas pedal and apply the brake to the bottom.
3. Place the transmission in Park (P) and turn on the parking brake.
4. Turn off the engine.

NOTICE

Improperly parked vehicles can cause serious injuries, so be sure to put the shifter in "P" when parking.

After a more strenuous driving session, allow the vehicle to idle for 1-2 minutes to cool the turbine system before shutting off the engine and parking the vehicle.

DRIVING ON SLIPPERY SURFACES

Whenever riding on slippery surfaces such as wet trails or loose gravel, or during freezing weather, follow these precautions:

1. Do not operate on excessively rough, slippery or loose terrain.
2. Slow down when entering slippery areas.
3. Engage 4X4 before wheels begin to lose traction.

NOTICE

Severe damage to drive train may occur if the 4X4 is engaged while the wheels are spinning. Allow the rear wheels to stop spinning before engaging 4X4, or engage 4X4 before wheels begin to lose traction.

4. Maintain a high level of alertness, reading the trail and avoiding quick, sharp turns, which can cause skids.
5. Correct a skid by turning the steering wheel in the direction of the skid. Never apply the brakes during askid.

DRIVING THROUGH WATER

When driving through waterlogged roads on rainy days or when traveling/wading in normal times, make sure the air filter is well sealed, otherwise it may cause water to enter the engine cylinder, resulting in damage to connecting rods and other parts. If you drive your vehicle through water, the water depth should not exceed the foot pedal, and take the following precautionary measures when driving through water:

NOTICE

Major engine damage can result if the vehicle is not thoroughly inspected after operating in water. Perform the services outlined in the Periodic Maintenance Chart. The following areas need special attention: engine oil, transmission oil, demand drive fluid and all grease fittings. If the vehicle tips or overturns in water, or if the engine stops during or after operating in water, service is required before starting the engine. Your authorized Segway dealer can provide this service. If it's impossible to bring the vehicle in before starting the engine, perform the service outlined in the Vehicle Immersion section of this manual, and take the vehicle in for service at the first opportunity.

1. Determine water depths and current before entering water.
2. Choose a crossing where both banks have gradual inclines.
3. Avoid operating through deep or fast-flowing water.
4. After leaving water, test the brakes. Apply them lightly several times while driving slowly. The friction will help dry out the pads. If it’s unavoidable to enter water deeper than the footrest level.
5. Proceed slowly. Avoid rocks and obstacles.
6. Balance your weight carefully. Avoid sudden movements.
7. Maintain a steady rate of speed. Do not make sudden turns or stops. Do not make sudden throttle changes.

DRIVING IN REVERSE

Follow these precautions when operating in reverse:

1. Always check for obstacles or people behind the vehicle.
2. Apply the throttle lightly. Never open the throttle suddenly.
3. Back slowly.
4. Apply the brakes lightly for stopping.
5. Avoid making sharp turns.

DRIVING OVER OBSTACLES

Follow these precautions when operating over obstacles:

1. Before operating in a new area, check for obstacles.
2. Watch out for bumps,potholes and other obstacles in the terrain.
3. When you approach any obstacle, reduce your speed and be prepared to stop.
4. Never try to ride over large obstacles, such as large rocks or fallen logs.
5. Always have a passenger dismount before operating over an obstacle that could cause a fall from the vehicle or vehicle tip over.

DRIVING UPHILL

Braking and handling are greatly affected when operating in hilly terrain. Improper procedure could cause loss of control or rollover. Whenever traveling uphill, follow these precautions:

1. Always move the 4X4 switch to 4X4WD (if equipped) before ascending or descending a hill.
2. Always travel straight uphill.
3. Keep both feet on the floor.
4. Always check the terrain carefully before ascending any hill. Never climb hills with excessively slippery or loose surfaces.

5. Proceed at a steady rate of speed and throttle opening. Never open the throttle suddenly.
6. Never go over the crest of a hill at high speed. An obstacle, a sharp drop, or another vehicle or person could be on the other side of the hill.

DRIVING DOWNHILL

When driving downhill, follow these precautions:

1. Avoid excessively steep hills.
2. Always move the 4X4 switch to 4X4WD (if equipped) before ascending or descending a hill.
3. Drive straight downhill. Avoid descending a hill at an angle, which would cause the vehicle to lean sharply to one side. Travel straight downhill when possible.
4. Slow down.
5. Apply the brakes slightly to aid in slowing.

DRIVING ON A SIDEHILL (SIDEHILLING)

Driving on a sidehill is not recommended. Improper procedure could cause loss of control or overturn. Avoid crossing the side of any hill unless absolutely necessary.

If crossing a sidehill is unavoidable, follow these precautions:

1. Slow down.
2. Exercise extreme caution.
3. Avoid crossing the side of a steep hill.

PARKING ON AN INCLINE

Avoid parking on an incline if possible. If it's unavoidable, follow these precautions:

1. Stop the engine.
2. Place the transmission in PARK.

3. Lock the parking brake.
4. Always block the rear wheels on the downhill side.

PARKING THE VEHICLE

1. Stop the vehicle on a level surface. When parking inside a garage or other structure, be sure that the structure is well ventilated and that the vehicle is not close to any source of flame or sparks, including any appliance with pilot lights.
2. Place the transmission in PARK.
3. Turn the engine off.
4. Engage the parking brake (if equipped).
5. Slowly release the brake pedal and make sure the transmission is in PARK before exiting the vehicle.
6. Remove the ignition key to prevent unauthorized use.

ENGINE BREAK-IN GUIDELINES

The engine break-in period is the first 25 hours of operation or the riding mileage which used first two full tanks of fuel.

- Avoid full throttle operation.
- Avoid pressing the accelerator pedal past ¾ down.
- Avoid continuous acceleration.

The brake needs a 124mi (200km) break-in period.

New brakes will not operate at their maximum efficiency until the break-in period is over. Brake performance may be compromised if not followed.

NOTICE
During this period, avoid full-throttle running, rapid acceleration, and constant rpm operation.

PRE-RIDE INSPECTION

Perform a pre-ride inspection before each ride to detect any potential problem that could occur during operation. The pre-ride inspection will help you monitor component wear and deterioration before they become a problem.

Correct any problems that you discover to reduce the risk of a breakdown or accident.Inspection Items.

Item	Note	Page
Braking system	Ensure correct operation	30
Brake fluid	Ensure appropriate level	105
Front balance bar	Check and lubricate if necessary	122
Rear balance bar	Check and lubricate if necessary	122
Tire	Check status and pressure	107
Wheel/fastener	Check to ensure the tightness of fasteners	109
Nut、bolt、fastener	Check to make sure it's tight	——
Checking the beadlock ring screws	Check to ensure tightness	——
Fuel	Ensure appropriate level	——
Engine oil	Ensure appropriate level	93
Coolant level	Ensure appropriate level	102
Coolant pipe	Check leakage	——
Indicator lamps/switches	Ensure correct operation	——
Air intake prefilter	Check ,clean	114
Front headlight/Brake light/tail light	Check operation	24
Seat belt	Check the length of the seat belt for damage and check whether the latch is in normal operation	41~42
Cab door	Check the door and latch for wear or damage.	43
Winches (Optional)	Check cables and motors	——

HAULING CARGO

⚠ WARNING

Overloading the vehicle or carrying cargo improperly can alter vehicle handling and may cause loss of control or braking instability. Always follow these precautions when hauling cargo:

Never exceed the stated load capacity for this vehicle.

Reduce speed and allow greater distances for braking when hauling cargo.

Never exceed the maximum weight capacity of the vehicle. When determining the weight you are adding to the vehicle, include the weight of the operator, passenger(s), accessories and loads in the rack or box. The combined weight of these items must not exceed the maximum weight capacity.

Always load the cargo box with the load as far forward and as low as possible.

When operating over rough or hilly terrain, reduce speed and cargo to maintain stable driving conditions.

Always operate the vehicle with extreme care when hauling cargo. Slow down and drive in the lowest gear available.

SECURE ALL LOADS BEFORE OPERATING. Unsecured loads can create unstable operating conditions, which could result in loss of control of the vehicle.

OPERATE ONLY WITH STABLE AND SAFELY ARRANGED LOADS. When handling off-centered loads that cannot be centered, securely fasten the load and operate with extra caution.

HEAVY LOADS CAN CAUSE BRAKING AND CONTROL PROBLEMS. Use extreme caution when applying brakes with a loaded vehicle. Avoid terrain or situations that may require backing downhill.

USE EXTREME CAUTION when operating with loads that extend over the rack sides. Stability and maneuverability may be adversely affected, causing a rollover.

⚠ WARNING

DO NOT TRAVEL FASTER THAN THE RECOMMENDED SPEEDS. Vehicle should never exceed 10 MPH (16 km/h) while towing a load on a level grass surface. Vehicle speed should never exceed 5 MPH (8 km/h) when towing loads in rough terrain, while cornering, or while ascending or descending a hill. When the vehicle speed is lower than 20KM/H and driving for more than 10 minutes, please make sure to use "L" gear.

NEVER EXCEED PAYLOAD LIMITS OF VEHICLE. Reduce speed, turn gradually, and allow greater distance for braking when carrying cargo. Carrying a passenger in the cargo box could result in a fall from the vehicle or contact with moving components. Never allow a passenger to ride in the cargo box.

GUIDE TO TRANSPORTATION OF GOODS

When hauling cargo, adhere to the following:

1. Always read and understand the load distribution warnings listed on the warning labels and in this manual. Never exceed the maximum capacity specified for your vehicle.

2. Do not load the cargo box beyond the specified maximum load capacity.

Maximum vehicle load weight (including weight of operator, passengers, cargo and accessories)	291 kg
Maximum container capacity	136 kg

TOWING DEVICE (IF EQUIPPED)

The tow hitch is a movable, removable component that can be removed from the vehicle when not towing. If you need to tow a load, subtract the weight of the cargo box load from the weight of the towing rack.

- The combination of the weight of the rear cargo box and the towing rack shall not exceed the cargo box capacity.
- The total load (weight on the operator, accessories, cargo and towing device) must not exceed the maximum weight capacity of the vehicle.

Where a designated attachment point is provided on the towbar:

Either:

Pass the cable through the attachment point and clip it back on itself.

Or:

Attach the clip directly to the designated point, This attematlve must be specially permitted by the trailer manufacturer since the clip may not be sufficiently strong for use in this way.

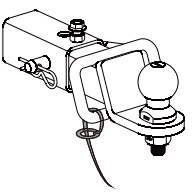

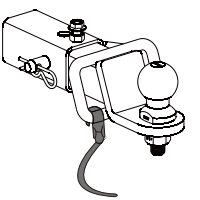

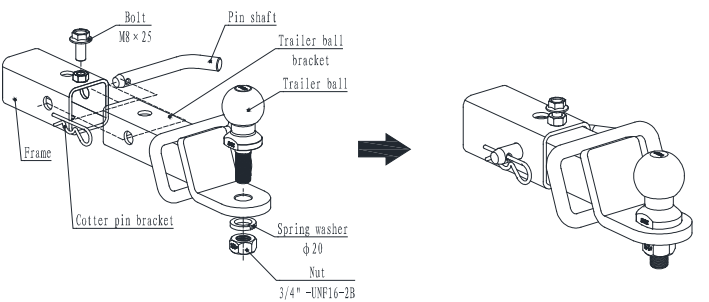

NOTICE

The speed must be less than 15km/h during tow loading.

Using an improper hitch or exceeding the maximum towing weight capacity may result in serious damage to your vehicle, in which case your vehicle will not be warranted.

Never install a towing device larger than 10 centimeters. Never install car accessories on the vehicle. Always install accessories that are approved (or equivalent) for use with the vehicle.

MAXIMUM TOWING CAPACITY

Do not exceed maximum towing capacity. Avoid towing on slopes.

Maximum towing weight	Maximum unbraked towing mass	800 kg
	Maximum unbraked tongue mass	100kg
	Maximum inertiabraked towing mass	1000kg
	Maximum inertiabraked tongue mass	100 kg

TOWING LOAD

Do not tie heavy objects to roll bars or other accessories for towing, as this could cause the vehicle to tip over.

Use only a winch (if fitted) to tow the vehicle or heavy load.

In an emergency, use a hitch to rescue a trapped vehicle.

NOTICE

Never use the front or rear hitch hooks to pull heavy loads.

These hitch points should only be used to rescue a trapped vehicle.

When towing a load with a tow chain or tow rope, make sure there is no slack before you start towing and maintain tension during towing. The inertia of the load may cause shocks when braking gradually.

⚠ WARNING

A loose tow chain or tow rope can cause it to snap and then snap back.

When towing another vehicle, make sure someone is in control of the vehicle being towed. They must brake and steer to prevent loss of control of the vehicle.

Refer to the winch manufacturer's instructions before using the winch to tow heavy loads.

Reduce speed and turn slowly when towing a load. Avoid hills and rough terrain. Do not attempt to drive on steep hills. Allow more braking distance, especially on inclined surfaces and when carrying passengers. Be careful not to slide or skid.

PRECAUTIONS FOR WINCH OPERATION

If your vehicle is equipped with a winch, please read this manual before installation and use to understand and be familiar with the relevant safety precautions and operating instructions.

⚠ WARNING

The user must read and understand the operating instructions and warnings of this owner's manual. If the

instructions or warnings are not followed, serious property damage or personal injury may occur.

- It is strictly prohibited for people under the age of 16 years old to use this equipment.
- Before operation or during use, pay attention to the safety and environmental conditions within the operating range of the winch.
- Do not overload. Ensure that all equipment used meets the maximum rope pull force rating. We recommend using an optional pulley block, double rope using a pulley block double rope will help reduce the load on the winch, rope and battery. When using a double rope, the rated value of the pulley block should be two times the rope pull of the winch rating.
- Under heavy loads, do not operate the winch for long periods of time. Electric winches are only designed for intermittent use and, should not be used under constant load. Do not pull for more than one minute. If the winch motor feels very hot, stop the winch and let it cool down for a few minutes.
- The rope end cannot bear the full load when fully extended, the rope must rotate around the drum at least 5 times.
- Avoid pulling from extreme angles, as this will cause the rope to

be rolled on one end of the barrel and may damage the rope or winch.

- Note that the rope-drawing capacity of the winch is the maximum rope- drawing capacity of the first layer, do not operate the winch with overload capacity past this amount of rope.
- Never hook the rope back to itself, otherwise the rope will become damaged. Use trunk protection protector.
- Before operation, make sure that the winch is firmly installed on the vehicle or bracket.
- Before moving heavy objects, check the rope to prevent kinks and uneven wire layers. The rope slack must be properly tightened under a weight of about 220 lbs. (100Kg).
- When pulling the load, be sure to place a protective layer on the wire rope near the hook end. This will prevent the possibility of breaking the rope and help prevent serious injuries and damage.
- Do not move the winch to assist in hauling heavy objects, it is easy to overload the winch and cause damage to the rope.
- Pay attention to the dangerous area. Stay away from the danger area during winch operation.The dangerous area is the area that contains the winch drum, fairlead, rope, pulley block, hook and motor.
- When the winch is under load, do not approach or cross the rope.
- When using the winch to move the load, place the vehicles transmission in neutral and apply the brake of the vehicle and place wedges under each wheel. When the hoist is working, the vehicle engine should be operated to charge the battery. Never use the winch with insufficient voltage.
- Never disconnect the power supply when there is a load on the winch.

- After the operation, release the load immediately and do not tighten the rope.
- Always stay away from ropes, hooks and winches when in operation or under load.
- Check winches, ropes, hooks, and broken strands of worn rope regularly. When handling the rope, please wear thick leather gloves. Do not let the rope slip over your hands. Check the rope before use.
- Crushed, pinched, worn or kinked areas seriously reduce the carrying capacity. A damaged rope should be replaced. It must be re-wound under a load of about 100 pounds.
- The clutch should be disconnected first, and then the rope should be pulled by the hook of the protective lever. Do not pull the rope directly through the hook with your fingers.
- Maintain the specified tension so that the rope can be wound on the reel and re-rolled after the operation tight.
- Do not operate the winch under the influence of alcohol or drugs. Be cautious during operation. If there is a problem, you should cut off the battery immediately and check it carefully.
- Wear goggles, insulating overalls, non-slip shoes, work caps, thick leather gloves, Place long hair tightly under a work cap and remove all jewelry.
- When the winch is in use, be sure to start the vehicle engine and set the gear position to "N."
- When the winch is working, it will draw voltage, so you must start the vehicle and step on the accelerator lightly to avoid damage to the battery.
- If severe noise or vibration occurs during the use of the winch, it must be stopped immediately.
- When the winch is not used, please remove the controller.

⚠ WARNING

When releasing or retrieving the winch rope, both ends of the rope must be left with sufficient

length to prevent the rope from being over-rolled in or out. When the rope is retrieving, please maintain a certain tension so that the wire can be retracted smoothly and can be wound tightly during retrieving.

⚠ WARNING

Always use the tow rope to pull the hook, do not hold the hook with your hands. This is not only important when winding the wire rope, but also when removing the wire rope from the winch under power.

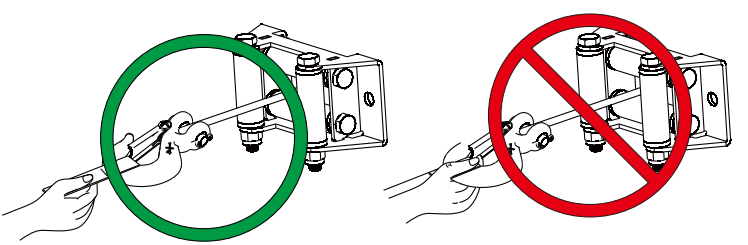

WINCH OPERATION

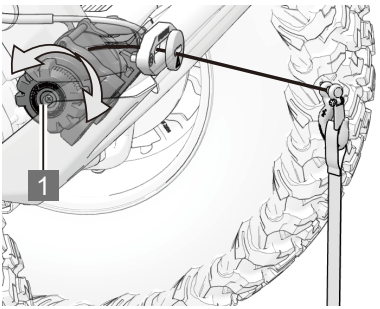

MANUAL RELEASE SWITCH OF WINCH

1 Manual release switch of Winch

- When the winch manual release switch is turned clockwise, the winch cable can be pulled out manually.
- When the winch manual release is switched (turned counterclockwise), the winch can be controlled by the switch.

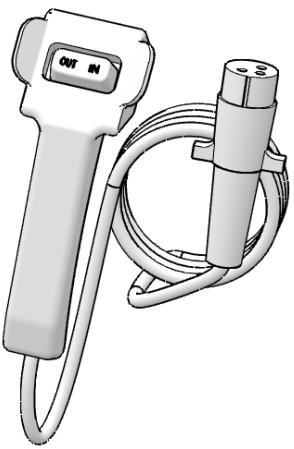

OPERATION OF CONTROL SWITCH

OUT：Release the winch cable

IN：Recoil the winch cable

Remove the control switch from the passenger armrest storage and connect the control switch to the power interface of the winch located at the front of the vehicle.

1. Open the waterproof cover of the power interface of the winch switch.
2. Insert the control switch wire into the power interface.

REMOTE CONTROL OPERATION

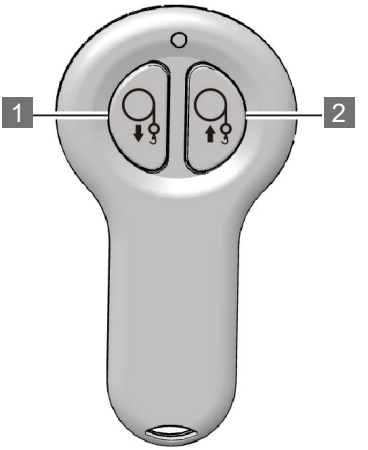

1 **Release the winch cable** 2 **Reclaim the winch cable**

NOTICE
When the remote control doesn't work, it may be that the battery in the remote control is exhausted. Replace the battery with a new one.

When the winch is needed, the rope should be aligned with the vehicle, preferably in a straight line. Too large an angle will change the direction of tension and damage the cable. In case of serious noise or vibration during the use of the winch, the operation of the winch must be stopped immediately.

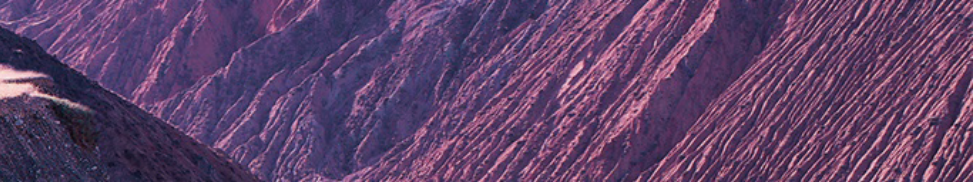

MAINTENANCE,STORAGE AND TRANSPORTATION

PRECAUTIONS FOR WINCH OPERATION 75

WINCH OPERATION 79

REGULAR MAINTENANCE 84

LIFTING AND SUPPORTING VEHICLES 89

LUBRICATING OIL 91

ENGINE OIL MAINTENANCE PROGRAM 92

OIL RECOMMENDATION 92

ENGINE OIL LEVEL CHECK 93

ENGINE OIL CHANGE 94

TRANSMISSION FLUID MAINTENANCE PROGRAM 98

FRONT/REAR AXLE OIL MAINTENANCE PROGRAM 98

FRONT AXLE OIL CHANGE 99

COOLING SYSTEM 101

INSPECTION OF COOLANT IN COOLANT TANK 101

COOLANT REPLACEMENT OF COOLING SYSTEM 103

BRAKE SYSTEM 104

BRAKE FLUID 105

BRAKE PADS AND BRAKE DISCS 106

TIRE 107

TIRE PRESSURE 107

GUIDELINES FOR CHECKING TIRE PRESSURE 107

TIRE TREAD DEPTH 108

WHEEL REPLACEMENT 109

MAINTENANCE,STORAGE AND TRANSPORTATION

TIRE REPLACEMENT 111

AIR FILTER 114

AIR FILTER CARTRIDGE INSPECTION 114

AIR FILTER REPLACEMENT 114

AIR FILTER INLET 115

LAMP 116

HIGH BEAM ADJUSTMENT 116

HEADLIGHT BEAM UP/DOWN ADJUSTMENT 117

HEADLIGHT BEAM LEFT/RIGHT ADJUSTMENT 117

SPARK PLUG 118

SPARK PLUG REMOVAL 118

SPARK PLUG CHECK 119

SPARK PLUG INSTALLATION 119

SPARK ARRESTER 120

SUSPENSION DRIVE LUBRICATION 122

FRONT (REAR) DRIVE SHAFT DUST COVER 123

BATTERY 124

BATTERY REMOVAL 125

BATTERY INSTALLATION 126

BATTERY CHARGING 127

FUSE 129

FUSE/RELAY DISTRIBUTION AND RATED AMPERAGE 129

FUSE BOX 130

MAINTENANCE,STORAGE AND TRANSPORTATION

FUSE/RELAY DISTRIBUTION AND AMPERE RATING 130
FUSE BOX REPLACEMENT 133
APPEARANCE CARE 134
VEHICLE WASHING 134
VEHICLE STORAGE 135
TRANSPORTATION VEHICLES 135

Good maintenance is essential for safety and driving. Regular maintenance is especially important, and to help you properly care for your vehicle, a maintenance program is provided in this section of the manual.

The maintenance intervals in this program are for normal vehicle operation. If your vehicle is frequently driven on poor roads or conditions, this may make it necessary to schedule maintenance earlier or more frequently. With some mechanical knowledge and basic vehicle tools, many maintenance items are simple to perform yourself. Simple instructions on how to perform maintenance yourself are described in this section.

Please note, however, that certain maintenance tasks require specialized tools and expertise. These tasks are best performed by your dealer. Even if you are experienced in carrying out your own maintenance, we recommend that your vehicle is serviced and maintained by your dealer, who will keep a maintenance record for your vehicle. This record will be useful in the event that you need to make a warranty claim.

⚠ WARNING

Failure to properly follow the maintenance instructions and precautions can result in serious injury or death, so be sure to follow the steps and precautions in this manual.

REGULAR MAINTENANCE

Careful scheduled maintenance will help keep your vehicle in the safest and most reliable condition. Inspection, adjustment and lubrication of important components are described in the Periodic Maintenance Chart. Inspect, clean, lubricate, adjust and replace parts as necessary. When inspection reveals the need for replacement parts, use genuine Segway parts, available from an authorized Segway dealer.

Repairs and adjustments are important to the operation of your vehicle. If you are unfamiliar with maintenance and adjustment procedures, have them performed by your Segway dealer. The

maintenance intervals in the following table are based on average ride time conditions, and heavily utilized vehicles must be inspected and serviced more frequently.

Heavy Use Definition:

- **Frequent immersion in mud, water or sand**
- **Frequent or prolonged operation in dusty environments**
- **Short travel cold weather operation**
- **Racing or racing style high RPM use**
- **Long periods of low-speed, heavy-duty operation**
- **Idle vehicles for long periods of time**

MAINTENANCE CHART KEY

Symbol	Description
►	Perform these procedures more often for vehicles subjected to severe use.
D	Have an authorized Segway Powersports dealer perform these services.

⚠ WARNING

The D-marking process can cause component failure and result in serious injury or death. Have an authorized Segway dealer perform these services.

Perform all services at whichever maintenance interval is reached first. Record maintenance and services in the Maintenance Log.

PRE-RIDE MAINTENANCE

ITEM		MAINTENANCE INTERVAL (WHICHEVER COMES FIRST)			REMARKS
		HOURS	CALENDAR	MILES (KM)	
	Steering		Pre-Ride		Visually inspect, test, or check components. Make adjustments and/ or schedule repairs when required
	Front suspension		Pre-Ride		
	Rear suspension		Pre-Ride		
	Tires/ Wheels/ fasteners		Pre-Ride		
	Brake fluid level		Pre-Ride		
	Brake system		Pre-Ride		
	Accelerator		Pre-Ride		
	Engine oil level		Pre-Ride		
	Air filter, pre-filter		Daily		Inspect. clean often. replace as needed
	Coolant		Daily		Check level
	Power steering unit (if equipped)		Daily		Inspect daily. clean often.
	Headlight/ taillight/ worklight		Daily		Check operation. apply dielectric grease if replacing lamps

BREAK-IN MAINTENANCE

ITEM		MAINTENANCE INTERVAL (WHICHEVER COMES FIRST)			REMARKS
		HOURS	CALENDAR	MILES（KM）	
	Fuel System	25 H	1 M	200 (320)	Break-in check: cycle key to pressurize fuel pump; check lines and fittings for leaks and abrasion
	Engine oil change	25 H	1 M	200 (320)	Break-in check: oil and filter change
	Front gearcase oil	25 H	1 M	200 (320)	Break-in check: oil level check
	Rear gearcase oil	25 H	1 M	200 (320)	Break-in check: oil level check

PERIODIC MAINTENANCE

Make sure to perform proper maintenance at recommended intervals as indicated in the tables. Some items of the maintenance schedule must be performed in function of the calendar, regardless of the distance or time of operation.

ITEM		MAINTENANCE INTERVAL (WHICHEVER COMES FIRST)			REMARKS
		HOURS	CALENDAR	MILES（KM）	
►	Brake pad wear	10 H	Monthly	100 (160)	Inspect periodically; replace as needed
	Battery	20 H	Monthly	200 (320)	Check terminals; clean; test
►	Air filter, main element	50H		500 (800)	Inspect; replace as needed; inspect frequently if subjected to severe use
►	General lubrication	50 H	3 M	500 (800)	Lubricate all fittings, pivots, cables, etc.
	Throttle Body Intake Duct	50 H	6 M	500 (800)	Inspect duct for proper sealing/air leaks
	Front wheel belt	50 H	6 M	500 (800)	Check and, if necessary, replace
	Cooling system	100 H	12 M	1000 (1600)	Inspect coolant strength seasonally; pressure test system yearly
►	Engine oil change	100 H	12 M	1000 (1600)	Change the oil and filter

PERIODIC MAINTENANCE

ITEM		MAINTENANCE INTERVAL (WHICHEVER COMES FIRST)			REMARKS
		HOURS	CALENDAR	MILES(KM)	
►	Oil lines and fasteners	100 H	12 M	1000 (1600)	Inspect for leaks and loose fittings
D	Transmission fluid change		60 M	12400 (20000)	Replace the fluid;
►	Front gearcase oil	100 H	12 M	1000 (1600)	Change fluid;
►	Rear gearcase oil	100 H	12 M	1000 (1600)	Change fluid
D	Fuel system/filter	100 H	12 M	1000 (1600)	Cycle key to pressurize fuel pump; check for leaks at fill cap, fuel lines/rail and fuel pump; replace lines every two years
►	Radiator (if applicable)	100 H	12 M	1000 (1600)	Inspect; clean external surfaces
►	Cooling hoses (if applicable)	100 H	12 M	1000 (1600)	Inspect for leaks
►	Engine mounts	100 H	12 M	1000 (1600)	Inspect
	Exhaust muffler/ pipe / Joints	100 H	12 M	1000 (1600)	Inspect; clean; replace worn parts
D	Spark plug	100 H	12 M	1000 (1600)	Inspect; replace as needed
	Spark arrester	100 H	12 M	1000 (1600)	Clean out
D	Clutches (drive and driven)	100 H	12 M	1000 (1600)	Inspect; clean; replace worn parts
D	Front wheel bearings	100 H	12 M	1000 (1600)	Inspect; replace as needed
D	Brake fluid	200 H	24 M	2000(3200)	Change every two years
►	Coolant		60 M		Replace coolant
D	Valve clearance	500 H		5000(8000)	Inspect; adjust
	Idle speed				Adjust as needed
D	Toe adjustment				Inspect periodically; adjust when parts are replaced
	Headlight aim				Adjust as needed

LIFTING AND SUPPORTING VEHICLES

FRONT OF VEHICLE

Place the vehicle on a flat and non-slip surface.

Enable 4WD mode.

Make sure the vehicle gearshift is placed in the PARK position.

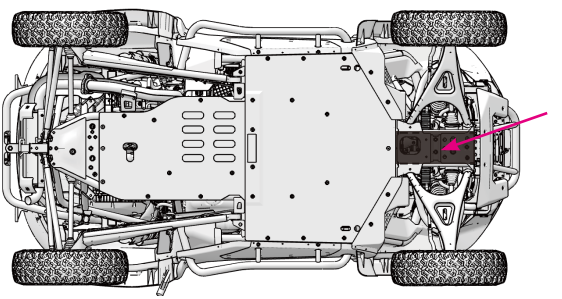

Schematic diagram of hydraulic jack support position at the front of the vehicle

Lift the front of the vehicle and install one jack stand on each side under the frame.

Lower the hydraulic jacks and make sure the vehicle is securely supported on both jack stands.

REAR OF VEHICLE

Place the vehicle on a flat and non-slip surface.

Activate 4WD mode.

Make sure the vehicle shift is placed in the PARK position.

Install a hydraulic jack under the vehicle.

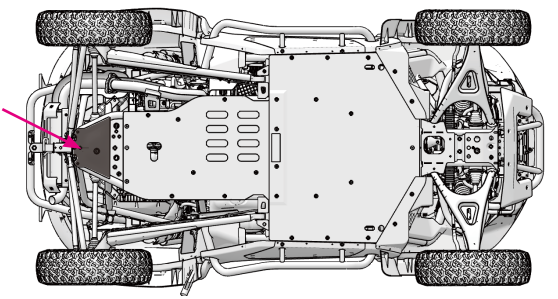

Schematic diagram of the hydraulic jack support position at the rear of the vehicle

Lift the rear of the vehicle and install one jack stand on each side under the frame.

Lower the hydraulic jacks and make sure the vehicle is securely supported on both jack stands.

LUBRICATING OIL

Check and lubricate all components at the intervals listed in the periodic maintenance chart. Items not listed in the chart should be lubricated in the general lubrication interval. The rocker arm is lubricated at the factory and does not require additional lubrication. However, if these components are heavily used, the user may perform additional lubrication as required.

Project	Recommended models	uantitative (science)	Inspection program
Engine oil	SN/GF-5， 5W-30 full season	5000 mL	Stay level within the safe range of the dipstick.
Front axle gear oil	SAE 80W-90	450 mL	—
Rear axle gear oil	SAE 80W-90	550 mL	
Transmission oil	DAE ATF-1 or DAE ATF-2	7500mL	—
Engine coolant	ECO BS -35 °C greener	15000mL	Keep the level between the fill lines.
Intercooler coolant	ECO BS -35 °C greener	4000 ml	Keep the level between the fill lines.
Brake fluid	MOTUL RBF 660 DOT4	—	Keep the level between the fill lines.
Suspension, balance bar grease	Semi-synthetic waterproof gGrease	—	Grease fittings (2 pumps max.) Every 800 km.

ENGINE OIL MAINTENANCE PROGRAM

Be sure to check and change the oil at the time required by the regular maintenance chart. Be sure to use the recommended engine oil. The oil filter must also be changed every time the oil is changed. Pay attention to the oil level. An increase in the oil level during cold weather can indicate contaminants collected in the oil sump or crankcase. If the oil level starts to rise, change the oil immediately. Monitor the oil level, if it continues to rise, stop using it and determine the cause. Your Segway Powersports dealer can assist.

⚠ WARNING

Vehicle operation with insufficient, degraded or contaminated engine oil will cause accelerated wear and tear, and may result in engine failures, accidents and / or injuries. Always perform the maintenance procedures listed in the periodic maintenance chart.

OIL RECOMMENDATION

Change the oil filter at every oil change.

It is recommended that a higher grade of the recommended type of oil be used for this engine. Follow manufacturer's recommendations for ambient temperature operation.

See Fluid Recommendations, Capacity, and Blocking Torque in the Lubricant Guide section.

⚠ CAUTION

Mixing brands or using non-recommended oils can cause serious engine damage. Always use the recommended oil and never use a blend of oils.

ENGINE OIL LEVEL CHECK

NOTICE

Insufficient oil will make the engine oil pressure too low, resulting in poor lubrication, increased engine wear and poor cooling, prone to failure and affect the engine life.

The oil level dipstick is located under the cargo box service cover.

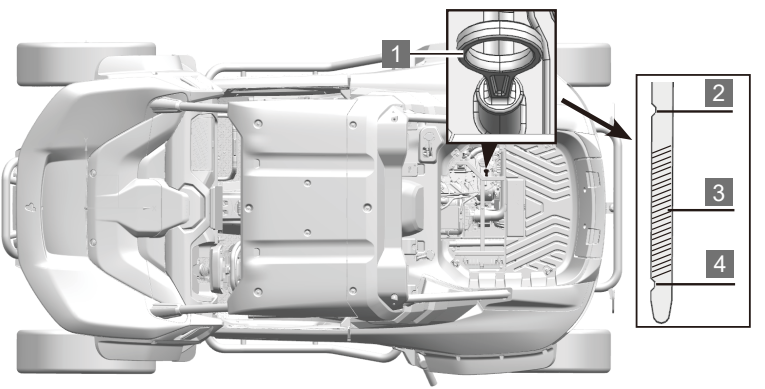

1 **Oil level scale**
2 **High oil level marker**
3 **Recommended oil level area**
4 **Low oil level marker**

Remove the rear cargo box service cover and the oil dipstick is located underneath.

1. Park the vehicle on a level surface with the engine at a stop.
2. Make sure the vehicle is cold.
3. Remove the dipstick and check that the oil level is between the MAX and MIN marks on the dipstick. Wipe the dipstick clean, pump it back in, then remove it and check the oil level.

The oil level is checked as shown in the figure below: the oil level between MAX position and MIN position is the proper oil level, lower than MIN indicates that the oil quantity is too low, more than MAX indicates that the oil quantity is too full, too low or too full is not suitable.

4. Clean the dipstick, then pump it back in and tighten it.

5. If the oil level is near or below the lower oil level mark, add the proper amount of oil.

ENGINE OIL CHANGE

NOTICE

Change the oil filter at every oil change.

Refer to Fluid Recommendations table for capacity and plug torque. Check oil level periodically, referring to the Interval Maintenance Schedule times, and add engine oil of the same type as that already in the engine if the oil level is below or near the low oil mark. Change the oil filter at every oil change.

⚠ WARNING

The used engine oil contains potentially hazardous pollutants, which can cause causes skin diseases such as dermatitis and skin cancer, so care should be taken to avoid prolonged and repeated exposure to such oils. Wash the skin thoroughly with soap and water to remove the used engine oil.

The used oil and filter must be disposed in a safe and compliant way with environmental regulations. Do not dispose used oil and filters in domestic garbage, sewers or on the ground. For information on oil recycling or scrapping, please consult your Segway Powersports dealer.

Do not put used engine oil in a place where children can reach.

The oil drain plug is located at the bottom of the engine and the oil filler cap is located under the cargo box service cover.

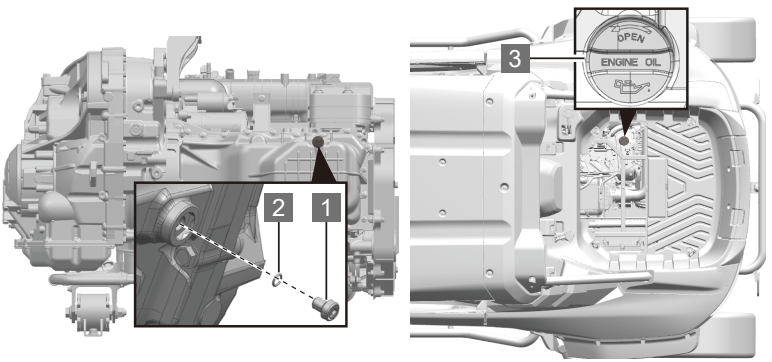

1 **Drain plug** 2 **Oil drain bolt gasket** 3 **Oil filler cap**

⚠ WARNING

Hot oil can cause skin burns. Don't let hot oil touch the skin

1. Remove the oil filler cap on the engine rocker cover or the oil filler cap on the oil filler tube.
2. Remove the oil drain screw on the engine oil pan and drain the oil.
3. Replace the oil drain bolt gasket with a new one.
4. Tighten the oil drain bolt.

Drain plug torque	40-50 N.m

5. Fill the crankcase with new oil from the oil filler neck.
6. Pull the dipstick from the engine and check that the oil level is between the MAX and MIN marks.
7. Install the oil filler cap.
8. Check the oil level again after the road test.

OIL SELECTION: SN/GF-5, 5W-30 All Season.

CHANGING THE OIL FILTER

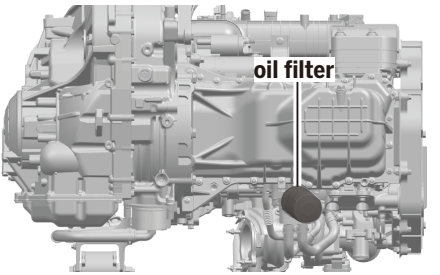

1. Start the engine and let it run warm until the engine coolant temperature reaches 80-90°C.
2. Remove the oil filler cap on the engine rocker cover or the oil filler cap on the oil filler tube.
3. Remove the oil drain plug from the oil pan to drain the oil.

⚠ WARNING

Hot oil can cause skin burns. Do not allow hot oil to come into contact with the skin.

4. Remove the engine oil filter using the special tool shown in the table below.
5. Clean the mounting surface on the side of the filter bracket.
6. Apply a small amount of oil to the o-ring of the oil filter.

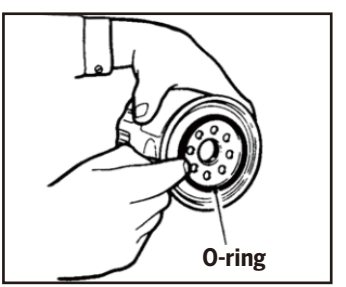

7. As soon as the o-ring of the oil filter touches the flange, tighten it to the specified torque with the special tool shown.

Oil filter torque	30 N.m

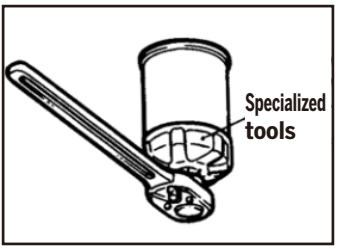

8. Install oil drain plug in oil pan and fill with oil from oil filler port in rocker arm chamber.
9. Run the engine at high speed 2-3 times, then check that the filter mounting surface is impervious to oil.

TRANSMISSION FLUID MAINTENANCE PROGRAM

Referring to the Interval Maintenance Chart, the transmission fluid should be changed every five (5) years or after 20,000 KM.

This procedure should be performed by an authorized Segway dealer or repair shop.

FRONT/REAR AXLE OIL MAINTENANCE PROGRAM

Check and replace front and rear transaxle drive fluids at intervals in the Periodic Maintenance Schedule. If any leaks are found, contact a Segway dealer to have the vehicle inspected and repaired.

If the four-wheel drive is in extreme use, change the front gearbox fluid every 25 hours, with extreme use including any of the following:

- Continuous operation in four-wheel drive
- Extended use of four-wheel drive mode in mountainous areas
- Main operating mode is four-wheel drive mode

NOTICE
If the front axle makes too much noise during four-wheel drive operation, the drive fluid needs to be replaced. If the noise persists, contact your Segway dealer.

FRONT AXLE OIL CHANGE

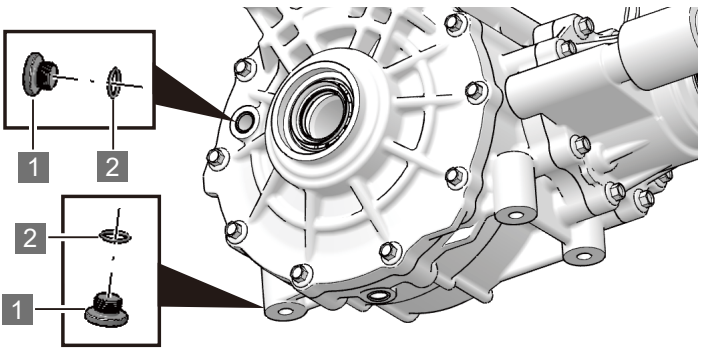

1 **Screw plug M14** 2 **O-ring 13.8 x 2.5**

1. Position the vehicle on a level surface.
2. Place a container under the oil drain at the bottom of the vehicle's front axle to collect waste oil.
3. Remove the oil drain plug and o-ring.
4. Wait for the oil to drain, reinstall the plug and o-ring, and replace the o-ring with a new one.

NOTICE
O-ring seals are not reusable. Always replace them with new parts.

Torque to the required value:

Screw plug M14 torque	**16-20N.m**

5. Remove the screw plug and O-ring seal at the oil filler.
6. Add the proper amount of the recommended type of oil.
7. Reinstall bolt plug and O-ring and replace with new O-ring. Torque to required value.
8. Check for leaks. Dispose of used fluid properly.

Rear axle oil change

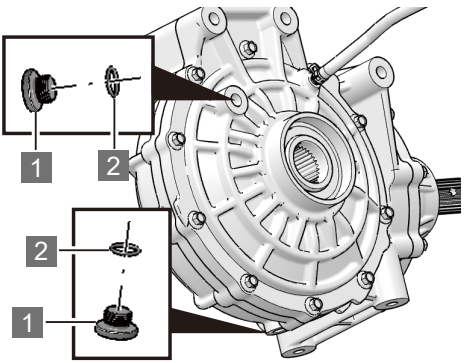

1 **Screw plug M14** 2 **O-ring 13.8 x 2.5**

1. Position the vehicle on a level surface.
2. Place a container under the oil drain at the bottom of the rear axle of the vehicle to collect the waste oil.
3. Remove the oil drain plug and o-ring.
4. Wait for the oil to drain, reinstall the plug and o-ring, and replace the o-ring with a new one.

NOTICE
O-ring seals are not reusable. Always replace them with new parts.

Torque to the required value:

Screw plug M14 torque	**16-20N.m**

5. Remove the screw plug and O-ring seal at the oil filler.
6. Add the proper amount of the recommended type of oil.
7. Reinstall bolt plug and O-ring and replace with new O-ring. Torque to required value.
8. Check for leaks. Dispose of used fluid properly.

COOLING SYSTEM

It is normal for coolant levels to drop on some newer vehicles because the system is draining residue. Check the coolant level and add coolant to the recovery bottle as recommended.

⚠ CAUTION

The cooling system includes water pumps, water hoses, clamps, etc. When the engine is running, there must be enough coolant in the cooling system to ensure the normal operation of the engine, otherwise the engine will be too hot. Engine working in overheating conditions, will affect the service life, and in serious cases will cause cylinder Scoring and other serious failures.

Check the radiator hoses from time to time for leaks or any damage. Replace as necessary.

INSPECTION OF COOLANT IN COOLANT TANK

The vehicle has two cooling systems, one to cool the engine and transmission, and the other to cool the intercooler system.

The vehicle's left expansion coolant tank can observe the coolant level of the intercooler cooling group, and the right expansion coolant tank can observe the coolant level of the engine cooling group.

⚠ CAUTION

Vapor spillage can cause burns. Do not remove the pressure cap when the engine is warm or hot. The engine must be allowed to cool before removing the pressure cap.

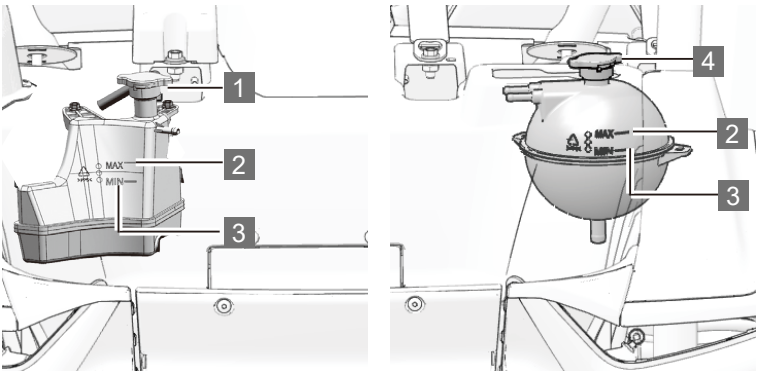

1 **Expansion tank (intercooler) pressure cap** 2 **MAX** 3 **MIN**

4 **Expansion tank (engine) pressure cap**

If coolant level is low, remove pressure cap and add coolant as needed. Maintain coolant level between the minimum mark "MIN" and maximum mark "MAX" on the tank (as fluid cools).

The engine cooling system fill port is located on the right front side of the cargo box and the intercooler cooling system fill port is located on the left front side of the cargo box.

Make sure the engine is cooled before filling the coolant.

1. Unscrew the pressure cap and fill in new coolant, be careful to observe the coolant position when filling, do not exceed the maximum fluid level.
2. Reinstall the pressure cap.

⚠ CAUTION

After the vehicle is driven on poor road conditions (such as mud, sandy roads, etc.), check and clean the mud stains and small stones and other debris on the radiator fins, so as not to affect the cooling effect of the radiator.

Be careful not to damage the radiator fins when cleaning. Use a low-pressure water stream. Do not use a high-pressure cleaning device. Do not use any tools that may damage the heat sink.

COOLANT REPLACEMENT OF COOLING SYSTEM

To ensure that the cooling system maintains its ability to protect the engine, we recommend that the system be completely drained every five (5) years with the addition of a new coolant 50/50 premix.

This procedure should be performed by an authorized Segway dealer or service center, etc.

BRAKE SYSTEM

The front and rear brakes are hydraulic disc brakes and these are self-adjusting.

As the brake pads wear, the brake fluid level will drop, as will leaks in the system.

⚠ WARNING

The brake fluid level must be checked periodically:

An overfilled brake cylinder may cause brake resistance or brake lockup, which could result in serious injury or death. Keep brake fluid at the recommended level and do not overfill.

Brake disc brake pads must be checked regularly for wear:

If the brake pads are worn, they should be replaced.

The following inspection is recommended to keep the braking system in good working condition. If the brake is in heavy use during normal operation, check it frequently.

1. Always keep the brake fluid at an appropriate level. Please refer to master cylinder/brake fluid section for details.
2. Check the braking system for liquid any leakage.
3. Check whether the brake travels pedal stroke feels too long or feels soft.
4. Check whether the friction gasket is worn, damaged or loose. When replacing the brake gasket, the brake pad must be replaced when the remaining limit thickness of the brake pad is not less than 0.06 in (1.5mm).
5. Check the safety and surface condition of the disc. Use the recommended brake cleaner to clean any grease. Do not use spray lubricants or other petroleum-based products. If any damage (crack, excessive corrosion, warping) is found, please check the dealer's service before operation with your Segway Powersports dealer befor further operation.

BRAKE FLUID

The hydraulic auxiliary brake system does not require adjustment. Check the brake fluid level in the auxiliary brake system frequently by looking at the brake fluid from the front left brake fluid sight hole cover. If the level is low, do the following.

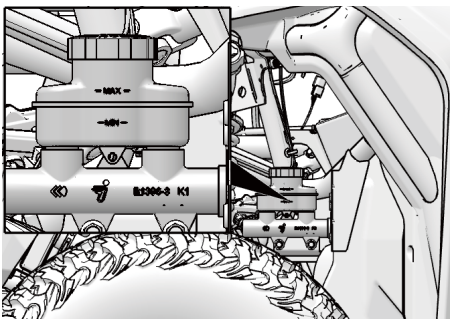

MAX Level **MIN Level**

Brake fluid is best located between the maximum level and the minimum level, if it is below the minimum level, remove the front filler cap and add the recommended brake fluid, observe the fluid level position and do not exceed the maximum level.

Use the recommended brake fluid:

Brake fluid	**Use MOTUL RBF660 (boiling point 325°C, wet boiling point 204°C) motor vehicle brake fluid conforming to FMYSS 116 DOT4, SAE J1703A&1704, or DOT4 motor vehicle brake fluid of equivalent boiling point.**

NOTICE

Brake fluid can damage plastic and painted surfaces and should be added with caution.

If the brake fluid comes into contact with the skin or eyes, flush with plenty of water immediately. If you feel sick, seek medical attention immediately.

BRAKE PADS AND BRAKE DISCS

Brake pads and discs wear will depend on the severity of use and driving conditions. Brake pads wear faster in wet and muddy conditions. Regularly check the wear of the brake pads and discs according to the maintenance intervals table. If the brake pads and discs are worn beyond the required values, the brake pads and discs must be replaced.

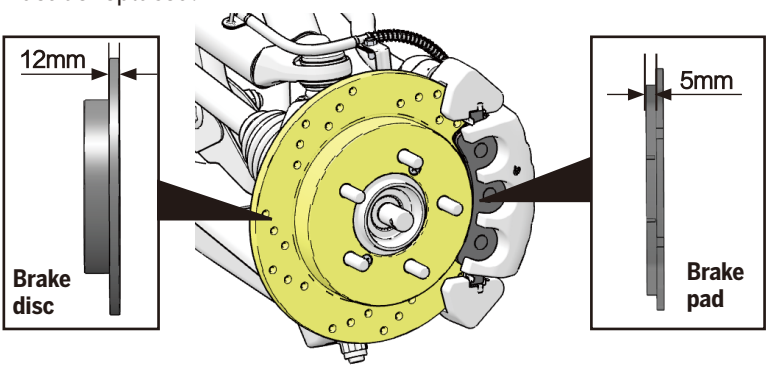

Brake Pad Thickness	Standard thickness	5.0 mm
	Minimum thickness	1.5 mm
Brake Disc Thickness	Standard thickness	12.0mm
	Minimum thickness	10.0mm

TIRE

TIRE PRESSURE

Driving a vehicle with the incorrect tire pressure may result in the following consequences:

- Reduced fuel efficiency.
- Reduced driving comfort and shortened tire life.
- Reduction in safety reduction.

When checking tire pressure, use the following instructions:

Recommended Tire Pressure	Front Tire	Rear Tire
	22.0 psi (150 kPa)	22.0 psi (150 kPa)

GUIDELINES FOR CHECKING TIRE PRESSURE

Please observe the following when checking tire air pressure:

- Check only after the tires have cooled down.
- If the vehicle has been parked for at least 3 hours or has not been driven for more than 1.5km (kilometers), checking at this time will give an accurate cold tire inflation pressure reading.
- Always use a tire pressure gauge. The appearance of the tire can sometimes be misleading. In addition, under-inflating a tire by even a few pounds of air may affect ride and handling.
- Do not lower tire pressure after driving. It is normal for tire pressure to increase after driving.

TIRE TREAD DEPTH

Observe the shoulder of the tire to find the tire wear limit warning mark “T.W.I”, follow the triangular symbol mark to see that the tire tread has a corresponding bulge, when the tread block camber is worn to the position of the bulge, the tire should be replaced, otherwise it will be due to the lack of strength, the tire will be blown out in the middle of the day.

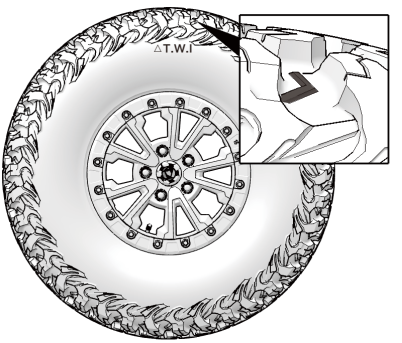

WHEN TO REPLACE A TIRE:

- If tire is damaged, such as a cut, delamination, or a deep crack of the sidewall, or a bulge is all indications that the tire is damaged.
- Tires can have air leaks and cannot be normally repaired due to the size or position of the area of the leak. If you are not sure, consult your Segway Powersports dealer.

WHEEL REPLACEMENT

When the tire tread wear has reached the replacement mark or the tire is damaged due to an external impact, the damaged tire should be replaced.

WHEEL COMPONENT REMOVAL

1. Stop the engine.
2. Place gearshift in (PARK).
3. Brake the parking brake.
4. loosen, but do not remove the 5 wheel mounting nuts with the tool first.
5. Raise the side of the vehicle by placing a suitable bracket under the kickstand frame.
6. Loosen the wheel mounting nuts.
7. Remove the entire wheel.

WHEEL COMPONENT INSTALLATION

1. First place the tire in the mounting position and screw the 5 wheel mounting nuts onto the wheel bolts in sequence.
2. Pre-tighten the bolts again with a tool in diagonal position.
3. Tighten with a torque wrench to the specified torque.

Wheel Mounting Nut	**120-130N.m**

⚠ CAUTION

Loosening the nut may cause the tire to fall off during operation, which may cause accidents or overturning. Always ensure that all nuts are tightened to the required value.

Do not use lubricating oil or grease on wheel bolts or wheel nuts. Lubricating oil or grease may cause excessive tightening of wheel nuts, resulting in damage to bolts or spoke wheels. In addition, lubricating oil or grease can cause wheel nuts to loosen and the wheels may fall off, leading to accidents and serious injuries. Remove any lubricating oil or grease from the wheel bolts or wheel nuts.

⚠ WARNING

Prohibit the use of tires with sizes different from those provided at the factory. Changing the transmission ratio may result in damage to the gearbox.

	Front wheel	Rear wheel
Factory wheel size	32×10.00R15	32×10.00R15
	35×10.00R16	35×10.00R16

TIRE REPLACEMENT

Tires should be replaced by an authorized Segway dealer, repair shop, or person of your choice.

⚠ WARNING

- **Replace only tires of the same type and size as the original.**
- **For unidirectional tread patterns, make sure that the tire is mounted in the correct rotation direction.**
- **Tires should be replaced by experienced personnel using tools in accordance with tire industry standards.**

INSTALLATION OF TIRE ON WHEEL WITH ANTI-DETACHMENT RING

1. Installing tire on wheel
   - On the opposite side of the beadlock ring, apply tire mounting lubricant to the inner bead of the tire and the wheel to ensure proper seating of the tire during inflation. Mount the inner bead of tire on the wheel.

⚠ CAUTION

Mount the tire from the beadlock ring side only.

- Place the outer bead of the tire on the convex shoulder of the inner ring of the beadlock ring and in the center of the tire.

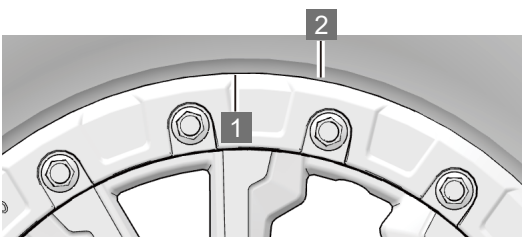

1 **Tire outer bead** 2 **Beadlock inner ring convex shoulder**

2. Install all beadlock ring screws. To avoid misclamping, install all screws by hand.

⚠ CAUTION

Never use an impact wrench to install beadlock screws. There is a higher risk of screw breakage or screw damage when using an impact wrench.

3. Tighten the beadlock screws in the following instructions and sequence.

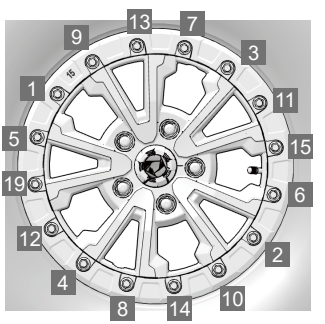

NOTICE

To ensure even force on the beadlock ring, tighten the screw only a few turns at a time.

Beadlock ring screws (first tightening torque)	**14 N•m ± 1 N•m**

4. At this point, check that the tire is still between the wheels. Reset if necessary.
5. Tighten the beadlock ring screws in the same order and to the second tightening torque.

Beadlock ring screws (second tightening torque)	**25 N•m ± 1 N•m**

NOTICE

The bead locking ring should contact the inner bead ring. The bead locking ring may be bent slightly to match the tire bead. This is normal.

6. Check the clearance between the tire and the bead locking ring, which should be approximately the same around the locking ring.

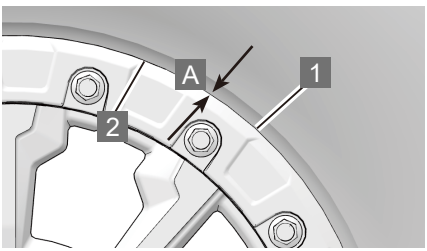

1 Tires **2 Anti-slip ring locking ring edge**

A The gap around the locking ring of the anti-disengagement ring is the same

If the clearance fails:

- Loosen all screws.
- Check the position of the tire on the wheel and reset as necessary.
- Re-tighten in sequence as per instructions.

7. Tighten the striker screws one last time in the sequence described.

Anti-tamper screw (last tightening torque)	**25 N•m ± 1 N•m**

8. Inflate the tire to seat the inner bead on the wheel. Always use safety measures, such as tire safety covers.

⚠ WARNING

Do not exceed the maximum recommended tire pressure when seating the bead.

AIR FILTER

AIR FILTER CARTRIDGE INSPECTION

Check air filter element for clogging and damage.

1. Check the air filter element for obstruction and damage.
2. Remove dirt deposited on the filter element as follows.
   - Tap the side of the element gently.
   - Blow compressed air from the inside of the element.
3. Scrape off the dirt from the inside of the air filter.
4. If you are reusing an old filter element, install it so that the oiled portion of the filter element is located at the air inlet (to prevent oil from spreading).

AIR FILTER REPLACEMENT

Air filter cartridge replacement can be done from the left rear wheel of the vehicle.

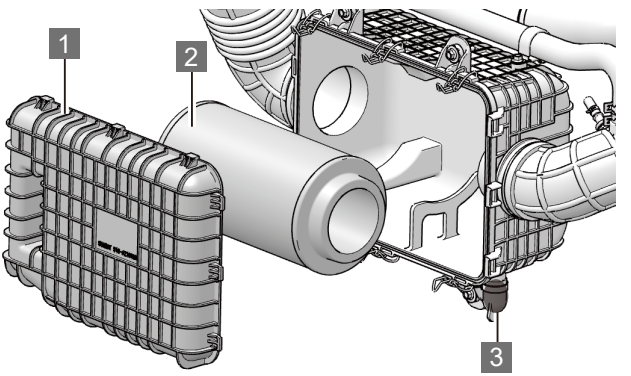

1 **Air filter cover** 2 **Filter cartridge** 3 **Air filter plug**

1. Remove the air filter cover by pressing the plastic tabs around the air filter cover inward.
2. Remove the old air filter cartridge.
3. Clean the inside of the air filter housing of any contaminants, if there is any water buildup, pull out the air filter plug, drain the water and reinstall the plug.
4. Install a new filter cartridge.
5. Reinstall the air filter cover.

⚠ WARNING

When assembling the filter element, please ensure that the buckle and end cover of the filter element are installed in place, otherwise it may cause engine failure or reduce its service life. When driving in a dusty environment, please shorten the time interval for checking the filter element. If the air filter is soaked or the filter element is damp, please drain the water from the air filter and replace the filter element.

AIR FILTER INLET

Check the air filter intake cover frequently.

The air filter intake hood is located on the left side of the cargo box.

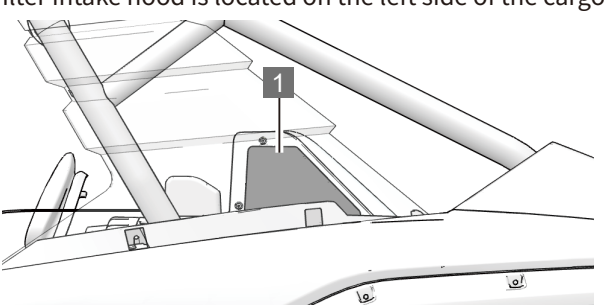

1 Air filter intake manifold mouthpiece

Do not cover the air filter inlet shroud. Clean as necessary and replace if damaged.

LAMP

⚠ CAUTION

Poor lighting can lead to reduced visibility while driving. The headlight and taillight lenses become dirty during normal operation. Clean the headlamps frequently and replace burnt-out headlamps promptly.

To ensure optimum visibility, always make sure that the lights are properly adjusted.

The headlights and taillights are LEDs (Light Emitting Diodes). The reliability of this technology has been proven.

In the event that these lights do not work, have an authorized Segway dealer, repair shop, or person of your choice perform an inspection.。

HIGH BEAM ADJUSTMENT

The headlight beam can be adjusted slightly upward/downward. Use the following procedure to make adjustments.

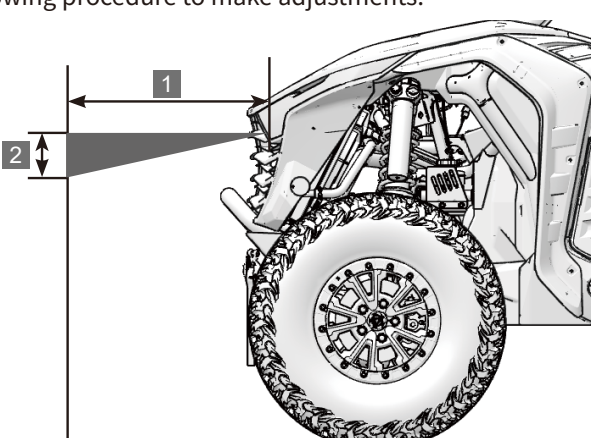

1. Place the vehicle on a level surface with the headlamps positioned 1 approx. (10 m).
2. Measure the distance from the floor to the center of the headlights and mark the wall at the same height.
3. Start the engine. Convert the headlight switch to high beam.
4. Observe the headlamps aiming at the wall. The strongest part of the headlight beam should be 5 cm 2 , below the mark on the corner of the wall, measured with the rider's weight included on the seat.

HEADLIGHT BEAM UP/DOWN ADJUSTMENT

To raise the headlight beam, turn the headlight speed adjustment screw counterclockwise.

To lower the headlight beam, turn the headlight speed adjustment screw clockwise.

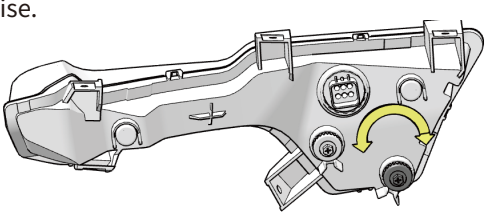

HEADLIGHT BEAM LEFT/RIGHT ADJUSTMENT

To headlight beam to the left, turn the headlight speed adjustment screw counterclockwise.

To headlight beam to the right, turn the headlight speed adjustment screw clockwise.

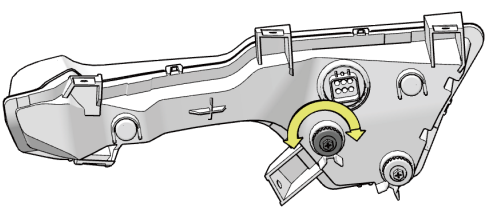

SPARK PLUG

Refer to the specification below for the recommended spark plug type and clearance specifications.

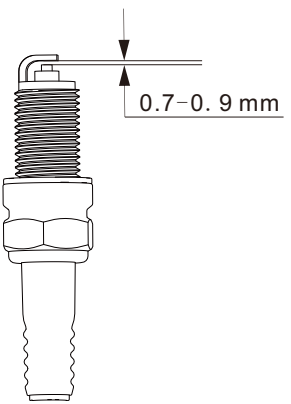

⚠ CAUTION

Using non-recommended spark plugs can cause serious engine damage. Always use the recommended spark plugs or their equivalent. Replace all 4 spark plugs at the same time when replacing them.

Spark Plug	
Model	SIFR6B7G
Spark Plug Gap	0.6-0.7 mm
Spark Plug Torque	27.5 ± 2.5 N.m

SPARK PLUG REMOVAL

⚠ CAUTION

Hot exhaust systems and engines can cause burns. Wear protective gloves when removing spark plugs for inspection.

The spark plug is located under the rear cargo box service cover, remove the rear cargo box service cover first:

1. Disconnect ignition coil connector.
2. Remove ignition coil retaining bolt.
3. While pulling up on the ignition coil, turn the ignition coil from side to side to remove the ignition coil and gasket from the spark plug.
4. Remove the spark plug by turning it counterclockwise with the special wrench for spark plugs in the tool bag.

SPARK PLUG CHECK

NORMAL PLUG

Normal insulator tips are gray, tan, or light brown. There are rarely any burning deposits. Electrodes are not burned or corroded. This indicates adequate engine combustion.

The tip should not be white. A white insulator tip indicates overheating due to improper use of the spark plug or incorrect valve body adjustment.

NEED TO BE REPLACED

Contaminated insulator tips are black. A moist oil film covers the launching end. There may be a carbon layer over the entire head. Generally, the electrodes are not worn. The usual causes of fouling are excessive oil, use of unrecommended oil or poor fuel quality.

GAP INSPECTION

Using a gap gauge, check that the electrode gap is within the specified range. If not within the specified range, replace the spark plug.

SPARK PLUG INSTALLATION

1. Make sure the contact surfaces of the cylinder head and spark plug are free of dirt before installation.
2. Screw the spark plug into the cylinder head by hand, then tighten with a torque wrench and appropriate socket.
3. Reinstall the ignition coil and connect the ignition coil wire speed connector.

Spark Plug Torque	27.5 ± 2.5 N•m

Ignition coil retaining bolt	9 ± 1 N•m

SPARK ARRESTER

Regular maintenance prevents carbon buildup (failure to do so will reduce engine performance) to ensure proper operation. Spark arrestors prevent random sparks from entering other vehicle parts during engine combustion. Failure to heed the following warnings could result in serious personal injury or death.

⚠ WARNING

Ensure that the exhaust pipe is cool. the engine has just stopped working and overheating of the exhaust pipe can lead to burns. To minimize fire hazards, make sure there are no combustible materials in the area when removing spark plugs. This procedure recommends the use of safety glasses.

The spark arrestor must periodically remove accumulated carbon as follows:

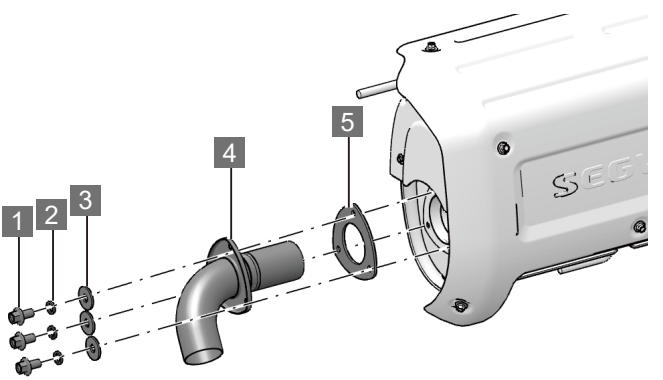

1 **Bolt M6x16 (3 pieces)**
2 **Bullet pads (3 pieces)**
3 **Flat washers (3 pcs)**
4 **Muffler Spark Eliminator**
5 **shims**

Please cool the engine and exhaust first.

1. Remove 3 pieces of M8*16 bolts, spring washers and flat washers, remove spark arrestor and graphite gasket.
2. Clean the spark arrestor with soap and water and, if necessary, remove all cinders with a wire brush (should be cleaned every 100 hours).
3. If the spark arrestor screen is damaged, replace with a new spark arrestor, which must be supplied by Segway.
4. Reinstall, graphite gasket spark arrestor following the reverse procedure of removal and tighten set screws.

NOTICE
Replacement gaskets should be readily available from Segway Powersports parts and service dept.

SUSPENSION DRIVE LUBRICATION

The vehicle's front/rear suspension and counterbalance components are equipped with grease nipples, which need to be adequately lubricated when the vehicle is in motion, and are lubricated by adding the appropriate amount of grease according to the maintenance interval schedule.

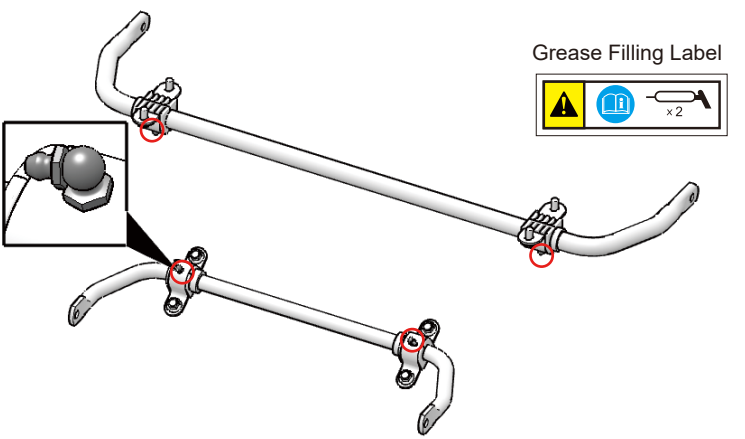

FRONT (REAR) DRIVE SHAFT DUST COVER

Inspect the front and rear driveshaft dust boots for cuts, damage, or grease leaks. If so, contact your dealer for replacement.

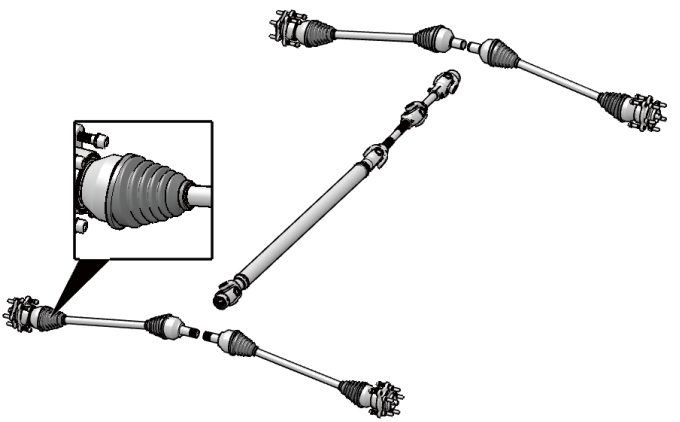

BATTERY

Due to natural discharge and leakage effects of some electrical equipment, the 12V battery will discharge gradually even when the vehicle is not in use. If the vehicle is parked for a long time, the 12V battery may discharge and may not start. Please charge the battery slowly one time a month if not in use. This will maintain the battery life cycle.

⚠ WARNING

12V batteries contain toxic and corrosive sulfuric acid and may produce flammable explosive hydrogen gas.To reduce the risk of serious injury or death, the following precautions should be observed when handling 12V batteries or working near them:

- **Do not smoke or light a match near a 12V battery.**
- **Avoid splashing electrolyte on eyes, skin and clothes.**
- **Wear safety goggles when working near 12V battery.**
- **Keep children away from 12V batteries.**
- **Be sure to charge the 12V battery in an open area.Do not charge a 12V battery in a poorly ventilated garage or enclosed room.**

BATTERY REMOVAL

The vehicle is equipped with two sets of batteries, the two sets of batteries are connected in parallel mode, if the batteries need to be replaced, the two sets of batteries need to be replaced at the same time.

NOTICE

If the electrolyte overflows, immediately wash it off with a solution of 1 tablespoon baking soda and 1 cup water to prevent damage to the vehicle.

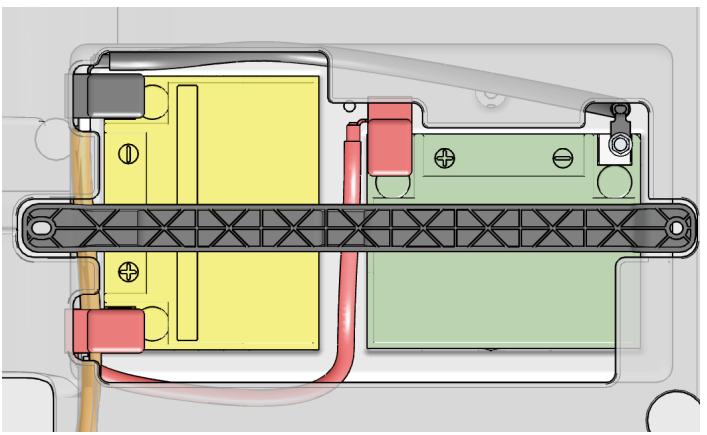

The battery is located under the passenger seat, remove the seat first.

Turn the power off before removing battery.

Disconnect the vehicle before removing the battery.

1. Remove the retaining bolts from the battery platen.
2. Remove the battery lever.
3. Flip up the positive and negative protective rubber covers.

4. Remove the negative battery screw and nut and disconnect the black (negative) battery cable.
5. Remove the positive battery screw and nut and disconnect the red (positive) battery cable.
6. Remove the battery from the vehicle.

BATTERY INSTALLATION

NOTICE

To reduce the chance of sparks, disconnect the black (negative) cable first. When reinstalling the battery, install the black (negative) cable last.

1. Clean battery cables and terminals with a hard wire brush. Corrosion can be removed with a solution of 1 cup water and 1 tablespoon baking soda.Rinse well and dry thoroughly.
2. Put the battery in the tray.
3. Connect and tighten the red (positive) cable and put the insulated rubber sleeve in place.
4. Connect and tighten the black (negative) cable and put the insulated rubber sleeve in place.
5. Install the battery press plate.
6. Tighten the battery clamp bolt.
7. Verify that cables are properly wired.

BATTERY CHARGING

NOTICE

When charging, the hydrogen produced by the 12V battery is combustible explosive gas. Please follow the following precautions before charging:

If charging the 12V battery is still installed in the vehicle, be sure to disconnect the ground cable.

Make sure the power switch on the charger is off when connecting and disconnecting the charger cable to the 12V battery.

Only charge slowly (5A or less), if not the 12V battery may explode.

Measures to be taken in emergency situations :

1. Connect the positive jumper cable's clip to the vehicle's dedicated jumper starter terminal.
2. Connect the clamp on the other end of the positive cable to the positive (+) terminal of another vehicle.
3. Connect the negative cable clamp to the negative battery terminal of another vehicle.
4. Connect the clamp on the other end of the negative cable to a sturdy, stable, unpainted metal end away from the dedicated jumper starter and any moving parts, as shown.

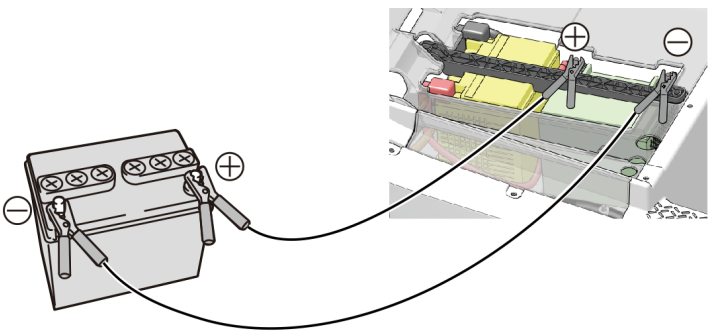

5. Start and idle the engine of the powered vehicle.
6. Start your vehicle in the usual manner. If the engine does not start, wait a few minutes and then repeat this attempt to protect the starter motor and power supply vehicle battery.
7. After starting a vehicle with a depleted battery, allow both vehicles to idle for a few minutes before disconnecting the jumper cables.
8. Remove the jumper wires in the reverse order of connection.

FUSE

All circuits on the vehicle have fuses to protect electrical equipment from damage caused by high current (short circuit or overload).

If any of the electrical parts do not work, the fuse may have blown. If this happens, check and replace the fuse if necessary. You can consider electrical faults, first check whether the fuse needs to be replaced, if it is found to have blown, replace the blown fuse. There is a spare fuse in the fuse box. Check all fuses for other possible causes. Replace all blown fuses and check the working condition of components. All fuses are concentrated in the fuse box. In the event of a system failure, see "Fuse Distribution and Ampere rating" for details of which fuses to check.

NOTICE

- **Do not use a fuse above the rated ampere value or replace it with anything else.**
- **Please use the same product.Never use wires for fuses, even temporary replacements are not allowed.**
- **Do not modify fuses or fuse boxes.**

FUSE/RELAY DISTRIBUTION AND RATED AMPERAGE

There is a. You can refer to the fuse distribution label on the top of the fuse box cover to find a fuse of the same power for replacement.

FUSE BOX

The vehicle is equipped with two fuse boxes, both of which are located under the center inspection cover between the driver's and passenger's seats.

Remove the B-shaped expansion buckle assembly from the top of the center inspection cover, and then remove the center inspection cover.

Open the fuse box by moving the tabs on the left and right sides of the fuse box cover to the outside and loosening the tabs.

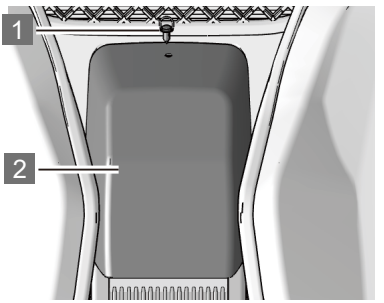

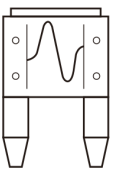

Ormal fuse

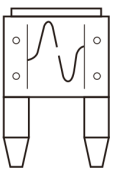

Blow fuse

1 B-Shape Expansion Buckle Assembly

2 Center caps

NOTICE

Pay attention to the direction of installation.
The label may be slightly different from the image below.

FUSE/RELAY DISTRIBUTION AND AMPERE RATING

A fuse distribution label is affixed to the top of the fuse box cover. You can refer to the function and rating of the fuses on the label to find the corresponding fuses for replacement.

FUSE BOX（A）

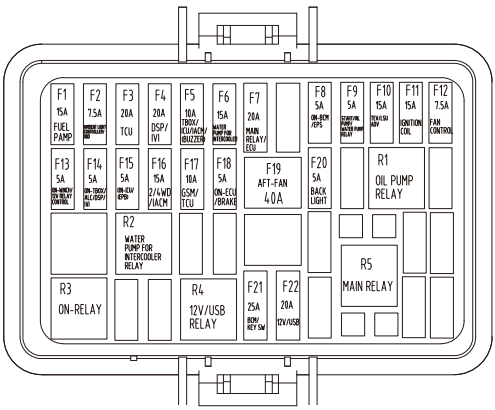

NO.	Instruction	Rating
F1	fuel pump	15A
F2	Ambient Lighting Control Module/Diagnostic Port	7.5A
F3	TCU	20A
F4	Amplifier/Center Control	20A
F5	T-BOX/Instrumentation/ Auxiliary Module/ （Buzzer）	10A
F6	Intercooler Electronic Water Pump	15A
F7	Main Relay/ECU	20A
F8	ON-BCM/EPS	5A
F9	On-start/Oil Pump/fuel pump relay	5A
F10	oxygen sensor/Carbon canister solenoid valve	15A
F11	Ignition coil	15A
F12	Fan control	7.5A
F13	Winch/12V power supply	5A

NO.	Instruction	Rating
F14	ON-TBOX/Ambient Lighting Control Module/ Center Control	5A
F15	ON-Instrumentation/ （EPB）	5A
F16	2-4WD/Differential lock solenoid valve/Auxiliary Module	15A
F17	Shifter/TCU	10A
F18	ON-ECU/Brake switch	5A
F19	Rear fan	40A
F20	backlight	5A
F21	BCM/Ignition switch	25A
F22	11V power supply/USB	20A
R1	Oil Pump Relay	12V 20A
R2	Intercooler Electronic Water Pump Relay	12V 20A
R3	ON Stall Relay	12V 20A

FUSE BOX（B）

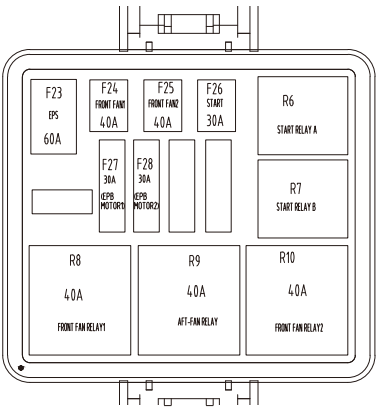

NO.	Instruction	Rating
F23	EPS	60A
F24	Front fan 1	40A
F25	Front fan 2	40A
F26	Starter relay	30A
F27	(EPB Electric motor 1)	30A
F28	(EPB Electric motor 2)	30A
R6	Starter relay A	12V 30A
R7	Starter relay B	12V 30A
R8	Front fan 1 relay	12V 40A
R9	rear fan relay	12V 40A
R10	Front fan 2 relay	12V 40A

FUSE BOX REPLACEMENT

To prevent an accidental short circuit, turn the ignition switch to the (OFF) position and check or replace the fuse(s).

To check or replace the circuit fuse, pull out the old fuse with a puller.

The fuse box cover is equipped with a puller. Using this tool will help you take out the fuse.

The fuse box cover is fitted with a common fuse which can be replaced.

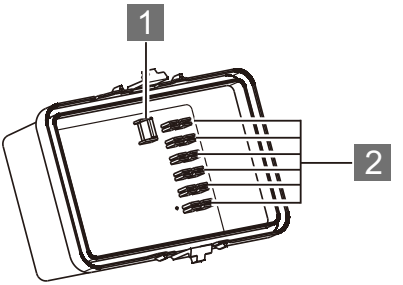

1 **Puller** 2 **Spare fuse**

NOTICE
If a replacement fuse suitable for the circuit rating is not available, install a lower rated fuse.

APPEARANCE CARE

VEHICLE WASHING

High pressure water can damage parts and remove paint and decals.

1. Cover or plug the exhaust outlet prior to washing your vehicle.
2. Fill a bucket with water. Mix in a mild, neutral detergent, such as dish washing liquid or a product made especially for washing motorcycles or automobiles.
3. Wash your vehicle with a sponge or soft towel. As you wash, check for heavy grime. If necessary, use a mild cleaner/degreaser to remove the grime.
4. After washing, rinse your vehicle thoroughly with plenty of clean water to remove any residue. Detergent residue can corrode alloy parts.
5. Dry your vehicle with a chamois or a soft towel. Leaving water on the surface to air dry can cause dulling and water spots. As you dry, inspect for chips and scratches.
6. It is recommended that after the vehicle has been cleaned, an air-blow gun can be used to blow dry the water stains on the electronic components, connector assemblies, and electrical parts before starting the vehicle, otherwise it may result in a short-circuit malfunction of the vehicle.
7. As a precaution, ride your vehicle at a slow speed and apply the brakes several times. This will help dry the brakes and restore normal braking performance.

Avoid the following components when washing:

- Wheel bearingsRadiator
- Cab and body panels
- Switches and controls
- Labels and decals
- Transmission seals
- Electrical components
- Fuel system components

If an informational or graphic label becomes illegible or comes off, contact your dealer to purchase a replacement.

VEHICLE STORAGE

When the vehicle is not used for a long time, it should be appropriately stored. The vehicle should be parked and cleaned. If there is no indoor storage conditions, covered outdoor storage is recommended.

TRANSPORTATION VEHICLES

These procedures should be followed when transporting vehicles.

1. Stop the engine.
2. Place the transmission in Park.
3. Lock the parking brake.
4. Secure fuel tanks, fuel caps.
5. Always securely attach the frame of the vehicle to the transportation equipment with suitable straps or ropes.
6. Remove the key to prevent accidents during transportation.

SPECIFICATIONS

TECHNICAL PARAMETERS OF VEHICLE.....137
VEHICLE IDENTIFICATION NUMBER 140
THE FRAME NAMEPLATE 141

TECHNICAL PARAMETERS OF VEHICLE

Projects		Main parameters	
Length x width x height（mm）		3560x1932x1873	
Wheelbase（mm）		2654	
Overall mass (of a vehicle)（kg）		1300	
Ground clearance（mm）		370	
Turning circle diameter（m）		12.5	
Steering wheel diameter（mm）		310	
Cargo box mass（kg）		136	
Spare fuel volume（L）		5	
Rim type and specification	Front wheel	32×10.00R15	35×10.00R16
	Rear wheel	32×10.00R15	35×10.00R16
Tire type and specification	Front wheel	Aluminum rim：15×7.0	Aluminum rim：16×7.0AT
	Rear wheel	Aluminum rim：15×7.0	Aluminum rim：16×7.0AT
Tire pressure	Front wheel	22 PSI（150 kPa）	
	Rear wheel	22 PSI（150 kPa）	
Service brake	Type	Hydraulic, Disc	
	Operating method	foot control	
Parking brake	Type	electronic button	
	Operating method	hand-operated	
Suspension type	Front	Double wishbone independent suspension	
	Rear	Multi-link independent suspension	
Shock absorber type	Front	Adjustable damping shock absorbers	
	Rear	Adjustable damping shock absorbers	

Projects		Main parameters
Air filter type		Paper cartridge type
Muffler type		impedance
Rating		173 kW
Engine speed at rated power		5500 r/min
Rated torque		390 N.m
Engine speed at rated torque		2000~3600 r/min
Engine type		Liquid-cooled, four-stroke
Engine model		486MYL
Engine capacity（mL）		1998
Compression ratio		10:1
Cylinder bore (mm) × stroke (mm)		86×86
Idle speed		800 ±100 r/min
Starting method		Electronic
Ignition type		EFI
Spark plug model		SIFR6B7G
Spark plug gap		0.6~0.7mm
Lubrication method		Pressure splash
Cooling method		Liquid cooling
Engine coolant capacity		15000ml
Intercooler coolant capacity		4000ml
Lubricant grade	Engine	SN SAE 5W-30 or higher
	Front axle gear oil	SAE 80W-90
	Rear axle	SAE 80W-90
	Transmission	DAE ATF-1 or DAE ATF-2
Lubricant capacity(mL)	Engine	5000ml
	Front axle gear oil	450ml
	Rear axle	550ml
	Transmission	7500ml
Fuel tank volume（L）		46

Projects		Main parameters
Headlight	Headlight high beam specification	15 W
	Headlight low beam specification	7.5 W
	Front Position Lamp Specification	2 W
	Daytime running light specifications	20.25 W
	Front turn signal color	20W
Rear tail light	Rear brake light specification	9 W
	Rear Position Lamp Specification	1 W
	Rear Turn Signal Lamp Specification	10.5 W
Rear license plate light color/ specification		White/2.5 W (Optional)
Audio power		30W/ piece
Battery capacity（V/Ah）		12/32
Auxiliary DC Socket		12V
Instrumentation		TFT color display
Center screen (inches)		10.4
safety belts	pilot	Four-point roll-up
	crew member	Four-point strap-on
Power output mode		Shaft drive
Winch（lb/m）		4500（Optional）

VEHICLE IDENTIFICATION NUMBER

Record the frame identification code and engine serial code in the spaces provided for assistance when ordering spare parts from a dealer or for reference in case the vehicle is stolen.

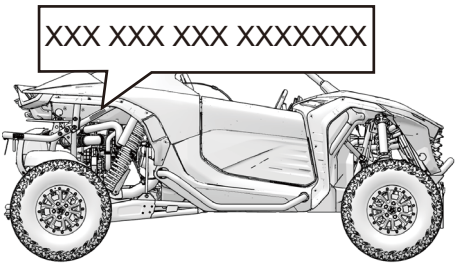

Frame identification code	

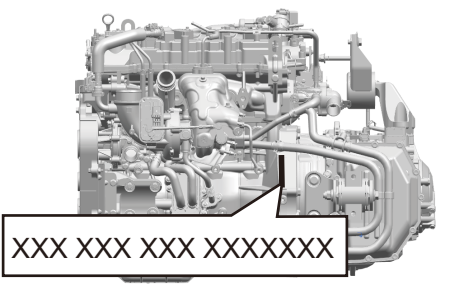

Engine serial code	

THE FRAME NAMEPLATE

The nameplate shows the basic characteristics information which include VIN code. It needs the VIN when the vehicle requires activation in the first time.

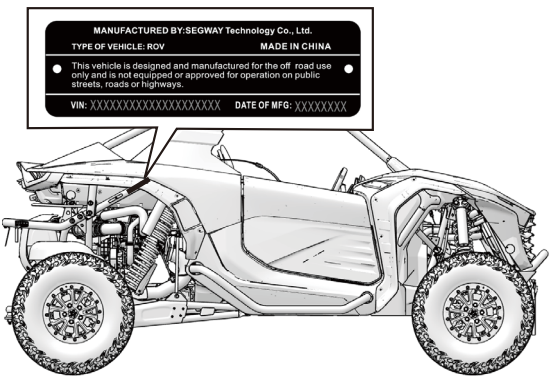

TROUBLESHOOTING

ENGINE DOESN'T TURN OVER 143
ENGINE PINGS OR KNOCKS 143
ENGINE STOPS OR LOSES POWER 144
ENGINE TURNS OVER, FAILS TO START 144
ENGINE BACKFIRES 145
ENGINE RUNS IRREGULARLY, STALLS OR MISFIRES 145
ENGINE STOPS OR LOSES POWER 147
METER FAULT CODE TABLE 148

With all the challenges you can encounter off-road,there's chance that sometime something may go wrong. This section gives practical advice to help you deal with a wide range of problems. Take time to read this section before you ride.

ENGINE DOESN'T TURN OVER

Possible Cause	Solution
Low Efficiency Engine Characteristics	Check for clogs or foreign objects in the fuel tank, fuel lines or throttle. Contact your dealer
TAutomatic jump switches	Reset Circuit Breaker
Low battery voltage	Recharge battery to 12.5 VDC
Loose battery connections	Check all connections and tighten
Loose cable connection	Check all connections and tighten

ENGINE PINGS OR KNOCKS

Possible Cause	Solution
Poor quality or low octane fuel	Replace with recommended fuel
Incorrect ignition timing	Consult your dealer
Incorrect spark plug gap or heat range	Set gap to spec or replace spark plugs

ENGINE STOPS OR LOSES POWER

Possible Cause	Solution
Overheated engine	Clean radiator Check water cooling systemClean engine exterior Consult your dealer

ENGINE TURNS OVER, FAILS TO START

Possible Cause	Solution
Out of Fuel	Refuel
Clogged fuel valve or filter	Inspect and clean or replace
Water is present in fuel	Drain and refill fuel system
Fuel valve is out of use	Check fuses or contact dealer
Old or non-recommended fuel	Replace with new fuel
Contaminated or defective spark plugs	Check spark plugs and replace if necessary
No spark to spark plug	Inspection or replacement
Crankcase filled with water or fuel	Consult your dealer
Overuse of choke	Inspect, clean and/or replace spark plugs
Clogged fuel injector	Clean or replace new fuel injector
Low battery voltage	Recharge battery to 12.5 VDC
Mechanical failure	Consult your dealer

ENGINE BACKFIRES

Possible Cause	Solution
Weak spark from spark plugs	Inspect, clean and/or replace spark plugs
Incorrect spark plug gap or heat range	Set gap to specs or replace plugs
Old or non-recommended fuel	Replace with new fuel
Incorrectly installed spark plug wires	Consult your dealer
Incorrect ignition timing	Consult your dealer
Mechanical failure	Consult your dealer

ENGINE RUNS IRREGULARLY, STALLS OR MISFIRES

Possible Cause	Solution
Fouled or defective spark plugs	Inspect, clean and/or replace spark plugs
Worn or defective spark plug wires	Consult your dealer
Incorrect spark plug gap or heat range	Set gap to specs or replace plugs
Loose ignition connec-tions	Check all connections and tighten
Water present in fuel	Replace with new fuel
Low battery voltage	Recharge battery to 12.5 VDC

ENGINE RUNS IRREGULARLY, STALLS OR MISFIRES

Possible Cause	Solution
Fuel tank vent line, filter curled or clogged	Inspection and replacement
Incorrect fuel	Replace with recommended fuel
Clogged air filter	Inspect, clean or replace
Reverse speed limiter malfunction	Consult your dealer
Throttle control failure	Consult your dealer
Other mechanical failure	Consult your dealer
May be caused by thin or rich fuel mixes	Consult your dealer
Low or contaminated fuel	Add or change fuel, clean the fuel system
Low octane fuel	Replace with recommended fuel
Clogged fuel filter	Replace filter
Incorrect jetting	Consult your dealer
Overuse asphyxiation	Inspect, clean and/or replace spark plugs
The fuel has a high octane rating	Use of recommended fuel

ENGINE STOPS OR LOSES POWER

Possible Cause	Solution
Out of fuel	refuel
Kinked or plugged fuel vent line	Inspect and replace
Water present in fuel	Replace with new fuel
Overuse of choke	Inspect, clean and/or replace spark plugs
Fouled or defective spark plugs	Inspect, clean and/or replace spark plugs
Worn or defective spark plug wires	Consult your dealer
Incorrect spark plug gap or heat range	Set gap to specs or replace plugs
Loose ignition connec-tions	Check all connections and tighten
Low battery voltage	Recharge battery to 12.5 VDC
Clogged air filter	Inspect and clean or replace
Reverse speed limiter malfunction	Consult your dealer
Electronic throttle con-trol malfunction	Consult your dealer
Other mechanical failure	Consult your dealer

METER FAULT CODE TABLE

Fault codes are fault codes that are generated when a vehicle malfunctions and will be displayed on the dashboard, these fault codes can help the repairer to quickly locate the point of failure so that it can be repaired.

When a fault code appeared on the vehicle, the Segway service dealer was contacted immediately to inspect the vehicle.

Failure Code	Failure Description
ECU module	
P1500	System Voltage High
P1501	System Voltage Low
P1600	Brake Switch "A"/"B" Correlation
P1601	Brake Switch "A" Circuit
P1502	CAN Module Hardware Response Time Out
P1503	Engine Coolant Temperature Sensor 1 Circuit Intermittent
P1504	Engine Coolant Temperature Sensor 1 Circuit High
P1505	Engine Coolant Temperature Sensor 1 Circuit Low
P1506	Knock Control Signal Evaluation Check Diagnostic Fault Detected
P1620	Fuel Rail Pressure Sensor “A” Circuit Range/Performance
P1621	Fuel Rail Pressure Sensor Circuit Bank 1-Negative Offset
P1622	Fuel Rail Pressure Sensor Circuit Bank 1-Positive Offset
P1623	Fuel Rail Pressure Sensor Circuit Intermittent/Erratic Bank 1
P1507	Fuel Rail Pressure Sensor Circuit High Bank 1
P1508	Fuel Rail Pressure Sensor Circuit Low Bank 1
P1624	Fuel Rail Pressure Sensor Circuit Bank 1
P1509	Engine Oil Pressure Control Circuit High
P150A	Engine Oil Pressure Control Circuit Low
P150B	Engine Oil Pressure Control Circuit Open
P150C	Camshaft Position Sensor "A" Circuit Range/Performance Bank 1 or Single Sensor

Failure Code	Failure Description
P150D	Crankshaft Position - Camshaft Position Correlation Bank 1 Sensor A
P150E	Camshaft Position Sensor "A" Circuit High Bank 1 or Single Sensor
P150F	Camshaft Position Sensor "A" Circuit Low Bank 1 or Single Sensor
P1625	Crankshaft Position - Camshaft Position Correlation Bank 1 Sensor A
P1510	Camshaft Position Sensor “B” Circuit Range/ Performance(Bank1)
P1511	Crankshaft Position - Camshaft Position Correlation Bank 1 Sensor B
P1512	Camshaft Position Sensor “B” Circuit High(Bank1)
P1513	Camshaft Position Sensor “B” Circuit Low (Bank1)
P1626	Crankshaft Position - Camshaft Position Correlation Bank 1 Sensor B
P1514	Crankshaft Position Sensor "A" Circuit Range/Performance
P1515	Crankshaft Position Sensor "A" Circuit Intermittent
P1516	Crankshaft Position Signal Output Circuit Open
P1627	System Too Lean Off Idle Bank 1
P1628	System Too Rich Off Idle Bank 1
P1517	Fan 1 Control Circuit
P1646	Fan 2 Control Circuit
P1519	Fan 1 Control Circuit High
P1647	Fan 2 Control Circuit High
P151A	Fan 1 Control Circuit Low
P1648	Fan 2 Control Circuit Low
P1521	"A" Camshaft Position Actuator Control Circuit Open Bank 1
P1522	"B" Camshaft Position Actuator Control Circuit Open Bank 1
P1523	"A" Camshaft Position Actuator Control Circuit High Bank 1
P1524	"B" Camshaft Position Actuator Control Circuit High Bank 1
P1525	"A" Camshaft Position Actuator Control Circuit Low Bank 1

Failure Code	Failure Description
P1526	"B" Camshaft Position Actuator Control Circuit Low Bank 1
P1629	"A" Camshaft Position Slow Response Bank 1
P162A	"B" Camshaft Position Slow Response Bank 1
P162B	"A" Camshaft Profile Control Performance/Stuck Off Bank 1
P162C	"B" Camshaft Profile Control Performance/Stuck Off Bank 1
P162D	Fuel Pressure Regulator 1 Performance-Pressure Too Low
P162E	Fuel Pressure Regulator 1 Performance -Pressure Too High
P1527	Fuel Rail/System Pressure – Too High
P1528	Fuel Rail/System Pressure – Too Low
P1529	Ignition Coil "A" Primary Control Circuit Open
P152A	Ignition Coil "C" Primary Control Circuit Open
P152B	Ignition Coil "D" Primary Control Circuit Open
P152C	Ignition Coil "B" Primary Control Circuit Open
P152D	Ignition Coil “A” Primary Control Circuit High
P152E	Ignition Coil “C” Primary Control Circuit High
P152F	Ignition Coil “D” Primary Control Circuit High
P1530	Ignition Coil “B” Primary Control Circuit High
P1531	Ignition Coil “A” Primary Control Circuit Low
P1532	Ignition Coil “C” Primary Control Circuit Low
P1533	Ignition Coil “D” Primary Control Circuit Low
P1534	Ignition Coil “B” Primary Control Circuit Low
P1535	Injector Circuit Open - Cylinder 1
P1536	Injector Circuit Open - Cylinder 3
P1537	Injector Circuit Open - Cylinder 4
P1538	Injector Circuit Open - Cylinder 2
P1539	Fuel Injector Group "A" Supply Voltage Circuit High
P153A	Fuel Injector Group "B" Supply Voltage Circuit High
P153B	Cylinder 1 Injector Circuit High
P153C	Cylinder 3 Injector Circuit High
P153D	Cylinder 4 Injector Circuit High

Failure Code	Failure Description
P153E	Cylinder 2 Injector Circuit High
P153F	Cylinder 1 Injector Circuit Range/Performance
P1540	Cylinder 3 Injector Circuit Range/Performance
P1541	Cylinder 4 Injector Circuit Range/Performance
P1542	Cylinder 2 Injector Circuit Range/Performance
P1543	Intake Air Temperature Sensor 1 Circuit Intermittent Bank 1
P1544	Intake Air Temperature Sensor 1 Circuit High Bank 1
P1545	Intake Air Temperature Sensor 1 Circuit Low Bank 1
P1546	Intake Air Temperature Sensor 2 Circuit Intermittent/Erratic Bank 1
P1547	Intake Air Temperature Sensor 2 Circuit High Bank 1
P1548	Intake Air Temperature Sensor 2 Circuit Low Bank 1
P1549	Fuel Pump “A” Control Circuit High
P154A	Fuel Pump “A” Control Circuit Low
P154B	Fuel Pump “A” Control Circuit Open
P154C	Knock/Combustion Vibration Sensor 1 Circuit Range/Performance Bank 1 or Single Sensor
P154D	Knock/Combustion Vibration Sensor 1 Circuit Bank 1 or Single Sensor
P154E	Knock/Combustion Vibration Sensor 1 Circuit High Bank 1 or Single Sensor
P154F	Knock/Combustion Vibration Sensor 1 Circuit Low Bank 1 or Single Sensor
P1550	Knock/Combustion Vibration Sensor 1 Circuit High Bank 1 or Single Sensor
P1551	Knock/Combustion Vibration Sensor 1 Circuit Low Bank 1 or Single Sensor
P162F	Turbocharger/Supercharger "A" Overboost Condition
P1630	Turbocharger/Supercharger "A" Underboost Condition
P1552	Random/Multiple Cylinder Misfire Detected
P1553	Cylinder 1 Misfire Detected
P1554	Cylinder 3 Misfire Detected

Failure Code	Failure Description
P1555	Cylinder 4 Misfire Detected
P1556	Cylinder 2 Misfire Detected
P1557	Misfire Detected - Fueling Disabled
P1558	CPU0:MPU Error (Registers, DSPR, PSPR)
P1559	CPU0: Unified DCACHE/DSPR ECC Uncorrectable Error
P155A	CPU0: Unified DCACHE/DSPR Address Error
P155B	CPU0:DCACHE TAG SRAM ECC Uncorrectable Error
P155C	CPU0:DCACHE TAG SRAM Address Error
P155D	CPU0:PCACHE TAGRAM ECC Uncorrectable Error
P155E	CPU0:PCACHE TAGRAM Address Error
P155F	CPU0:Unified PCACHE/PSPR ECC Uncorrectable Error
P1560	CPU0:Unified PCACHE/PSPR Address Error
P1561	CPU1:Lockstep Comparator Error
P1562	CPU1:MPU Error (Registers, DSPR, PSPR)
P1563	CPU1:Unified DCACHE/DSPR ECC Uncorrectable Error
P1564	CPU1:Unified DCACHE/DSPR Address Error
P1565	CPU1:DCACHE TAGRAM ECC Uncorrectable Error
P1566	CPU1:DCACHE TAGRAM Address Error
P1567	CPU1:PCACHE TAGRAM ECC Uncorrectable Error
P1568	CPU1:PCACHE TAGRAM Address Error
P1569	CPU1:Unified PCACHE/PSPR ECC Uncorrectable Error
P156A	CPU1:Unified PCACHE/PSPR Address Error
P156B	LMU:SRAM ECC Monitor
P156C	LMU:SRAM ECC Uncorrectable Error
P156D	LMU:SRAM Address Error
P156E	SMU:Recovery Timer 0 Timeout
P156F	SMU: Recovery Timer 1 Timeout
P1570	PMU:PFLASH ECC Non Correctable Multiple Bit
P1571	PMU:PFLASH Addressing Error
P1572	PMU:PFLASH ECC Monitor Error (covers all ECC modules)

Failure Code	Failure Description
P1573	PMU:PFLASH EDC Comparator Error (covers all PFLASH instances)
P1574	SCU/CGU: System PLL OSC_WDT: Out Of Range Input Clock
P1575	SCU/CGU: System PLL VCO Loss−of−Lock Event
P1576	SCU/EVR: EVR 1.3V Digital Under Voltage
P1577	SCU/EVR: EVR 3.3V Over Voltage
P1578	SCU/EVR: External Supply Over Woltage
P1579	SCU/WDTS:Safety Watchdog Time−Out
P157A	SCU/WDTCPU0:Watchdog CPU0 Time−Out
P157B	SCU/WDTCPU1:Watchdog CPU1 Time−Out
P157C	SCU/CGU: PLL_ERAY VCO Loss−of−Lock Event
P157D	SCU/WDTCPU2:Watchdog CPU2 Time−Out
P157E	SCU/DTS: Die Temperature Sensor Overflow
P157F	Registers: Register Monitor Error Detection
P1580	SCU/LSCU: SCU configuration Error: Monitors the Dual−rail Property (inverted signals) from the Lockstep Comparator Unit (LSCU) Alarms
P1581	SCU/CGU: Clock monitoring: Out Of Range Frequency STM
P1582	SCU/CGU: Clock monitoring: Out Of Range Frequency PLL_ERAY
P1583	SCU/CGU: Clock monitoring: Out Of Range Frequency System PLL
P1584	SCU/CGU: Clock monitoring: Out Of Range Frequency SRI
P1585	SCU/CGU: Clock monitoring: Out Of Range Frequency SPB
P1586	SCU/CGU: Clock monitoring: Out Of Range Frequency GTM
P1587	SCU/CGU: Clock monitoring: Out Of Range Frequency ADC
P1588	GTM: SRAMs Non Correctable Error
P1589	FLEXRAY:SRAM Address Error
P158A	Misc SRAMs:SRAM ECC Uncorrectable Error
P158B	Misc SRAMs:SRAM Address Error
P158C	GTM: SRAMs Address Error

Failure Code	Failure Description
P158D	CAN: SRAM Uncorrected Error
P158E	CAN: SRAM Address Error
P158F	FLEXRAY:SRAM ECC Uncorrectable Error
P1590	CPU2:MPU Error (Registers, DSPR, PSPR)
P1591	CPU2:Unified DCACHE/DSPR ECC Uncorrectable Error
P1592	CPU2:Unified DCACHE/DSPR Address Error
P1593	CPU2:DCACHE TAG SRAM ECC Uncorrectable Error
P1594	CPU2:DCACHE TAG SRAM Address Error
P1595	CPU2:121 PCACHE TAGRAM ECC Uncorrectable Error
P1596	CPU2:PCACHE TAGRAM Address Error
P1597	CPU2:Unified PCACHE/PSPR ECC Uncorrectable Error
P1598	CPU2:Unified PCACHE/PSPR Address Error
P1599	ECM/PCM Power Relay Control Circuit/Open
P159A	ECM/PCM Power Relay Control Circuit High
P159B	ECM/PCM Power Relay Control Circuit Low
P159C	Injection Pump Fuel Metering Control "A" (Cam/Rotor/Injector)
P159D	Injection Pump Fuel Metering Control "A" High (Cam/Rotor/Injector)
P159E	Fuel Pressure Regulator "A" Control Circuit Open
P159F	Injection Pump Fuel Metering Control "B" High (Cam/Rotor/Injector)
P15A0	Function Monitoring: Fault of ECU ADC - Null Load Test Pulse
P15A1	Function Monitoring: Fault of ECU ADC - Test Voltage
P15A2	Function Monitoring:Powerstage and/or Communication Error During Shut Off Path Test
P1602	Internal Control Module Accelerator Pedal Position Performance
P15A3	Function Monitoring: Check of Predicted Air Mass Failed
P15A4	Function Monitoring: Fault of ECU Check of Injection Cut-off

Failure Code	Failure Description
P15A5	Function Monitoring: Fault of ECU in Check of Cylinder Individual Fuel Corrections
P15A6	Synchro Process Plausibility Check Based on Engine Speed and Synchro Counters
P15A7	Function Monitoring:Fault of ECU or Sensor in rl-comparison
P15A8	Function Monitoring: Fault of ECU or Sensor in Mixture Check
P15A9	Function Monitoring: Fault of ECU Comparison of Lambda and Operation Mode
P15AA	Internal Control Module Engine RPM Performance
P15AB	Function Monitoring: Fault of ECU Ignition Timing
P15AC	Function Monitoring: Monitoring of ICO From Level1
P15AD	Function Monitoring: Monitoring of ICO From Level2
P15AE	Function Monitoring: Fault of Starter Control
P15AF	Internal Control Module Torque Performance
P15B0	Status of ABE Line is Active and Normal Operation Voltage is Present
P15B1	WDA active Due to Errors in Query/Response Communication
P15B2	Error PIN is Active and No Query Response Communication Error is Active
P15B3	WDA active Due to Overvoltage Detection
P1631	Barometric Pressure Sensor "A" Circuit Range/Performance
P1632	Barometric Pressure Sensor "A" Circuit Range/Performance
P1633	Barometric Pressure Sensor "A" Circuit Range/Performance
P1634	Barometric Pressure Sensor "A" Circuit Range/Performance
P1635	Barometric Pressure Sensor "A" Circuit Range/Performance
P1636	Barometric Pressure Sensor "A" Circuit Range/Performance
P15B4	Barometric Pressure Sensor "A" Circuit High
P15B5	Barometric Pressure Sensor "A" Circuit Low
P1637	Barometric Pressure Sensor "A" Circuit

Failure Code	Failure Description
P15B6	Manifold Absolute Pressure Sensor Circuit High
P15B7	Manifold Absolute Pressure Sensor Circuit Low
P15B8	Engine Oil Pressure Sensor/Switch "A" High
P15B9	Engine Oil Pressure Sensor/Switch "A" Low
P1638	Manifold Absolute Pressure Sensor Circuit Range/ Performance
P1639	Manifold Absolute Pressure Sensor Circuit Range/ Performance
P15BA	Turbocharger/Supercharger Boost Sensor "A" Circuit High
P15BB	Turbocharger/Supercharger Boost Sensor "A" Circuit Low
P163A	Turbocharger/Supercharger Boost Sensor "A" Circuit Range/Performance
P163B	Turbocharger/Supercharger Boost Sensor "A" Circuit Range/Performance
P1603	Throttle/Pedal Position Sensor/Switch “D” Circuit High
P1604	Throttle/Pedal Position Sensor/Switch “E” Circuit High
P1605	Throttle/Pedal Position Sensor/Switch “D” Circuit Low
P1606	Throttle/Pedal Position Sensor/Switch “E” Circuit Low
P15BC	Sensor Reference Voltage A Circuit/Open
P15BD	Sensor Reference Voltage B Circuit/Open
P15BE	Sensor Reference Voltage "C" Circuit/Open
P163C	Starter Damaged or Wire Dropped
P163D	Engine Block or Starter is not Engaged
P15BF	KL50r Wire Short Circuit to Battery
P15C0	KL50r Wire Short Circuit to Ground
P163E	Starter Relay "A" Stuck On
P163F	Starter Relay "B" Stuck On
P1640	Starter Relay "A"/"B" Stuck Off
P1641	Turbocharger/Supercharger Bypass Valve "A" - Mechanical
P15C1	Starter Relay “B” Circuit
P15C2	Starter Relay "B" Circuit High

Failure Code	Failure Description
P15C3	Starter Relay "B" Circuit Low
P15C4	Starter Relay “A” Circuit
P1642	Control Module Internal Temperature "A" Too High
P15C5	Starter Relay “A” Circuit High
P15C6	Starter Relay “A” Circuit Low
P1607	Throttle/Pedal Position Sensor/Switch “D”/“E” Voltage Correlation
P15C7	Evaporative Emission System Purge Control Valve Circuit High
P15C8	Evaporative Emission System Purge Control Valve Circuit Low
P15C9	Evaporative Emission System Purge Control Valve Circuit Open
P15CA	Not Plausible Error of UMA Learning
P15CB	Break of DV-E Adapation Due to Ambient Conditions
P15CC	Max error of DV-E Fault during relearning of UMA
P15CD	Min error of DV-E Fault during relearning of UMA
P15CE	Not Plausible Error of DV-E Position Deviation
P15CF	Not Plausible Range of DV-E Control
P15D0	Not Plausible Offset of NLP Learning for First Learning
P15D1	Max Error of NLP Learning
P15D2	Not Plausible Offset of NLP Learning for Last Learning
P15D3	Min Error of NLP Learning
P15D4	Throttle Actuator "A" Control Motor Circuit/Open
P15D5	Throttle Actuator "A" Control Motor Current Range/Performance
P15D6	Max Error of DV-E Return Spring Check Failure
P15D7	Throttle Actuator Electrical Malfunction
P15D8	Throttle/Pedal Position Sensor/Switch "A" Circuit High
P15D9	Throttle/Pedal Position Sensor/Switch "A" Circuit Range/Performance
P15DA	Throttle/Pedal Position Sensor/Switch "B" Circuit High

Failure Code	Failure Description
P15DB	Throttle/Pedal Position Sensor/Switch "B" Circuit Low
P15DC	Throttle/Pedal Position Sensor/Switch "B" Circuit Range/Performance
P15DD	Throttle Actuator "A" Control Motor Circuit High
P15DE	Throttle Actuator Control System Forced Limited Power
P15DF	Throttle/Pedal Position Sensor/Switch "A" Circuit Low
P1643	Turbocharger/Supercharger Wastegate Actuator "A" Range/Performance
P1644	Turbocharger/Supercharger Wastegate Actuator "A" Range/Performance
P15E0	Turbocharger/Supercharger Wastegate Solonoid “A”
P15E1	Turbocharger Boost Control Position Sensor "A" Circuit High
P15E2	Turbocharger Boost Control Position Sensor "A" Circuit Low
P15E3	Turbocharger/Supercharger Wastegate Actuator "A" High/Low
P15E4	Turbocharger/Supercharger Wastegate Actuator General Error
P15E5	HO2S Heater Resistance Bank 1 Sensor 1
P15E6	HO2S Heater Control Circuit High Bank 1 Sensor 1
P15E7	HO2S Heater Control Circuit Low Bank 1 Sensor 1
P15E8	HO2S Heater Control Circuit Bank 1 Sensor 1
P15E9	O2 Sensor Negative Current Control Circuit/Open Bank 1 Sensor 1
P15EA	O2 Sensor Reference Voltage Circuit/Open Bank 1 Sensor 1
P15EB	O2 Sensor Circuit High Voltage Bank 1 Sensor 1
P15EC	O2 Sensor Circuit Low Voltage Bank 1 Sensor 1
P15ED	O2 Sensor Exhaust Sample Error Bank 1 Sensor 1
P15EE	Turbocharger/Supercharger Bypass Valve Control Circuit High
P15EF	Turbocharger/Supercharger Bypass Valve Control Circuit Low

Failure Code	Failure Description
P15F0	Turbocharger/Supercharger Bypass Valve Control Circuit
P15F1	O2 Sensor Positive Current Control Circuit/Open Bank 1 Sensor 1
P1645	Vehicle Speed Sensor "A" Circuit Range/Performance
P15F2	Vehicle Speed Sensor "A" Circuit
P15F3	Auxiliary Water Pump Dry Run Error
P15F4	Coolant Pump "B" Control Circuit High
P15F5	Coolant Pump "B" Control Circuit Low
P15F6	Coolant Pump "B" Control Circuit Open
P15F7	Auxiliary Water Pump Low Speed Error
P15F8	Auxiliary Water Pump Over Temperature Error
P15F9	Auxiliary Water Pump Stall Error
P15FA	ECM/PCM Power Relay Control Circuit Low
P15FB	Internal Control Module Non-Volatile Random Access Memory (Nvram) Error
P15FC	Internal Control Module Non-Volatile Random Access Memory (Nvram) Error
Communication type fault	
U3003	Module supply voltage too high
U3004	Module supply voltage too low
U0073	PCAN Bus BUSOFF
U0101	TCU node loss fault
U0103	GSM node loss fault
U0100	ECU Node Loss Fault
U0198	T-Box node loss fault
U0245	IVI node loss fault
U0131	EPS node loss fault
U0140	BCM node loss fault
U0156	IACM node loss Fault
U024A	ALC node loss fault
U0155	ICU node loss fault

Failure Code	Failure Description
EPS module	
B1122	Main signal of the torque sensor faulty
B1124	Second signal of the torque sensor is faulty
B1125	The difference between main and secondary torque is too large
B1132	The motor has no power
B1168	Motor rotor signal fault
B1114	External EEPROM read / write failure
B1166	The rotor Angle SPI signal is disconnected
B1151	The steering wheel Angle is out of limit
B1161	Pinion Angle sensor disconnected
B1162	Center gear Angle sensor disconnected
B1163	Steering wheel angle not centered
BCM module	
B1206	LeftFrontTureLampBroken
B1207	LeftFrontTureLampShort
B1208	RightFrontTureLampBroken
B1209	RightFrontTureLampShort
B120A	LeftRearTureLampBroken
B120B	LeftRearTureLampShort
B120C	RightRearTureLampBroken
B120D	RightRearTureLampShort
B120E	LowerBeamBroken
B120F	LowerBeamShort
B1210	HighBeamBroken
B1211	HighBeamShort
B1216	PositionLampBroken
B1217	PositionLampShort
B1218	BrakeLampBroken
B1219	BrakeLampShort

Failure Code	Failure Description
B121C	HornBroken
B121D	HornShort
B121E	ECU/VCU node loss
EPB module	
C1100	Controller main chip fault
C1101	Controller ASIC Failure
C1102	Ignition switch wire fault
C1103	End of line test fault
C1104	Left actuator power supply undervoltage fault
C1105	Left actuator power supply overvoltage fault
C1106	right actuator power supply undervoltage fault
C1107	right actuator power supply overvoltage fault
C1108	Actuator overload fault
C1109	Left drive circuit or actuator fault
C1110	Right drive circuit or actuator fault
C1111	Left motor or line fault
C1112	Right motor or line fault
C1113	Left or right motor status mode fault
C1114	EPB switch fault
C1115	Caliper temperature unknown
C1116	EPB switch clamping disabled
C1117	EPB caliper at full release
C1118	EPB abnormal power down

EMISSION CONTROL SYSTEM

SOURCE OF EXHAUST EMISSIONS 163
EXHAUST EMISSION CONTROL SYSTEM..... 163
CRANKCASE EMISSION CONTROL SYSTEM 163
NOISE CONTROL SYSTEM..... 163
DECLARATION OF DRIVER'S EXPOSURE TO NOISE LEVEL... 164
THE UNDERSIGNED: ZHU KUN, GENERAL MANAGER..... 164
DECLARATION OF VIBRATION DECLARATION..... 165

SOURCE OF EXHAUST EMISSIONS

The combustion process produces carbon monoxide(CO),oxides of nitrogen(NOx)and hydrocarbons(HC).Control of hydrocarbons and oxides of nitrogen is very important because, under certain conditions, they react to form photochemical smog when subjected to sunlight. Carbon monoxide does not react in the same way, but it is toxic.

EXHAUST EMISSION CONTROL SYSTEM

The exhaust emission control system includes a PGM-F system and oxygen sensor.

No adjustments to this system should be made although periodic inspection of the components is recommended.

The exhaust emission control system is separate from the crankcase emission control system.

CRANKCASE EMISSION CONTROL SYSTEM

The engine is equipped with a closed crankcase system to prevent discharging crankcase emissions into the atmosphere. Blow-by gas is returned to the combustion chamber through the air cleaner.

NOISE CONTROL SYSTEM

Do not modify the engine,air intake or exhaust components, in order to meet local noise level requirements.

DECLARATION OF DRIVER'S EXPOSURE TO NOISE LEVEL

The undersigned: Zhu kun, General Manager
Company name and address of the manufacturer:
Segway Technology Co., Ltd.
No. 395, Xiacheng South Road, Wujin National High-tech Industrial Development Zone, Changzhou, Jiangsu, China

Hereby declares that:
For the following vehicle:

1.1. Make (trade name of the manufacturer): SEGWAY
1.2. Type: SGW2000F-S3
1.2.1. Variant(s): SGW2000F-S3
1.2.2. Version(s): A
1.2.3. Commercial name(s) (if available):
Super Villain SX20T S, Super Villain SX20T P,
Super villain SX20T Standard, Super Villain SX20T Premium
1.3. Category, subcategory and speed index of the vehicle:
Variant/Version: SGW2000F-S3/A: T1b

The Driver's exposure to noise level result is
Variant/Version: SGW2000F-S3/A: 85.7 dB(A)

(Limit: 86 dB(A)) according to test method 2 in accordance with :section 3 of Annex XIII to EU 1322/2014.

Place: Changzhou, China Date: 20/11/2024

Signature: zhukun Name and position in the company: Zhu kun, General Manager

DECLARATION OF VIBRATION DECLARATION

The undersigned: Zhu kun, General Manager
Company name and address of the manufacturer:
Segway Technology Co., Ltd.
No. 395, Xiacheng South Road, Wujin National High-tech Industrial Development Zone, Changzhou, Jiangsu, China

Hereby declares that:
For the following vehicle:

1.4. Make (trade name of the manufacturer): SEGWAY
1.5. Type: SGW2000F-S3
1.2.1. Variant(s): SGW2000F-S3
1.2.2. Version(s): A
1.2.3. Commercial name(s) (if available):
Super Villain SX20T S, Super Villain SX20T P,
Super villain SX20T Standard, Super Villain SX20T Premium

1.3. Category, subcategory and speed index of the vehicle:
Variant/Version: SGW2000F-S3/A: T1b

The value of the vibration level measured according to Annex XIV to EU 1322/2014 is

Driver mass		a_{wS} m/s^2	a_{wB} m/s^2	a_{wS} /a_{Wb}	Requirement
59±1kg	Test run 1	0.68	1.80		Deviation<10% between test run 1/2 and Arithmetic mean, a_{wS}<1.25 m/s^2
	Test run 2	0.69	1.84		
	Arithmetic mean	0.69	1.82	0.38	
98±5kg	Test run 1	0.63	1.72		
	Test run 2	0.66	1.75		
	Arithmetic mean	0.65	1.73	0.38	

a_{wS}: rms value of the weighted seat vibration acceleration measured during a standard roadway test
Place: Changzhou, China Date: 20/11/2024

Signature: zhukun Name and position in the company: Zhu kun, General Manager

WARRANTY

LIMITED WARRANTY 167
REGISTRATION.....167
EXCLUSIONS-ARE NOT WARRANTED 167
LIMITATIONS OF WARRANTIES AND REMEDIES..... 168
MAINTENANCE LOG 170

LIMITED WARRANTY

SEGWAY TECHNOLOGY CO., LTD gives a LIMITED WARRANTY on components of your new SEGWAY vehicle against defects in parts or workmanship when properly set up and operated in accordance with the recommendations set forth in the SEGWAY Owner's Manual. SEGWAY gives a SIX(6) MONTHS limited warranty. This warranty covers parts and labor charges for repair or replacement of defective parts and begins on the date of purchase by the original retail purchaser.

This warranty is transferable to another owner during the warranty period through a SEGWAY dealer, but any such transfer will not extend the original term of the warranty. The duration of this warranty may vary by international region based upon local laws and regulations.

REGISTRATION

At the time of sale, the Warranty Registration Form must be completed by your dealer and submitted to SEGWAY within ten days of purchase. Upon receipt of this registration, SEGWAY will record the registration for warranty.

EXCLUSIONS-ARE NOT WARRANTED

The following are not warranted under any circumstances:

1. Normal wear and tear.
2. Routine maintenance items, tune-ups, adjustments.
3. Damage caused by failure to provide proper maintenance and/or storage, as described in the Owner's Manual.
4. Damage resulting from removal of parts, improper repairs, service, maintenance, or use of parts not manufactured or approved by SEGWAY or resulting from repairs done by a person that is not an authorized servicing SEGWAY dealer.
5. Damage caused by abuse, abnormal use, neglect or operation

of the product in a manner inconsistent with the recommended operation described in the Owner's Manual.

6. Damage resulting from accident, submersion, fire, theft, vandalism or any force majeure.
7. Operation with fuels, oils or lubricants which are not suitable for use with the product. (see the section" Technical parameters of vehicle "on Owner's Manual).
8. Damages from rust, corrosion resulted from salty water or corrosive material.
9. Damage resulting from the racing or any other competitive activity.
10. Damage resulting from the vehicle has been altered or modified in such a way so as to adversely affect its operation, performance or durability, or has been altered or modified to change its intended use.

LIMITATIONS OF WARRANTIES AND REMEDIES

This limited warranty excludes any failures that are not caused by a defect in material or workmanship. This warranty provides no coverage for consumable components, general wear items, or any parts exposed to friction surfaces, stresses, environmental conditions and/or contamination for which they were not designed or not intended, including but not limited to the following items:

- Batteries
- Bearings
- Brake components
- Bushings
- Throttle body components
- Circuit breakers/fuses
- Clutches components
- Coolants
- Drive belts
- Filters
- Finished/unfinished surfaces
- Hydraulic components/fluids
- Light bulbs/lamps
- Lubricants
- Sealants
- Seat components
- Spark plugs
- Steering components

- Electronic components
- Engine components
- Suspension components
- Wheels and tires

This warranty provides no coverage for personal loss or expense, including mileage, transportation costs, hotels, meals, shipping or handling fees, product pick-up or delivery, replacement rentals, loss of product use, loss of profits, or loss of vacation or personal time.

THE EXCLUSIVE REMEDY FOR BREACH OF THIS WARRANTY SHALL BE,AT SEGWAY' OPTION, REPAIR OR REPLACEMENT OF ANY DEFECTIVE MATERIALS, COMPONENTS, OR PRODUCTS. THE REMEDIES SET FORTH IN THIS WARRANTY ARE THE ONLY REMEDIES AVAILABLE TO ANY PERSON FOR BREACH OF THIS WARRANTY. SEGWAY SHALL HAVE NO LIABILITY TO ANY PERSON FOR INCIDENTAL, CONSEQUENTIAL OR SPECIAL DAMAGES OF ANY DESCRIPTION, WHETHER ARISING OUT OF EXPRESS OR IMPLIED WARRANTY OR ANY OTHER CONTRACT,NEGLIGENCE, OR OTHER TORT OR OTHERWISE. THIS EXCLUSION OF CONSEQUENTIAL, INCIDENTAL, AND SPECIAL DAMAGES IS INDEPENDENT FROM AND SHALL SURVIVE ANY FINDING THAT THE EXCLUSIVE REMEDY FAILED OF ITS ESSENTIAL PURPOSE. THE IMPLIED WARRANTY OF FITNESS FOR A PARTICULAR PURPOSE IS EXCLUDED FROM THIS LIMITED WARRANTY. ALL OTHER IMPLIED WARRANTIES (INCLUDING BUT NOT LIMITED TO THE IMPLIED WARRANTY OF MERCHANTABILITY) ARE LIMITED IN DURATION TO THE ABOVE SIX MONTH WARRANTY PERIOD.SEGWAY DISCLAIMS ALL EXPRESS WARRANTIES NOT STATED IN THIS WARRANTY. SOME STATES DO NOT PERMIT THE EXCLUSION OR LIMITATION OF INCIDENTAL OR CONSEQUENTIAL DAMAGES OR ALLOW LIMITATIONS ON THE DURATION OF IMPLIED WARRANTIES, SO THE ABOVE LIMITATIONS MAY NOT APPLY TO YOU IF INCONSISTENT WITH CONTROLLING REGION LAW.

MAINTENANCE LOG

Use the following chart to record periodic maintenance.

VIN	Date	Miles(Km)or Hours	Service item