SEGWAY

MADE FOR MORE

FUGLEMAN

OWNER'S MANUAL

SGW1000F-U2

Read this manual carefully,it contains important safety information

Minimum recommended operator age:16

T1b

WELCOME

Thank you for buying Segway UTV. Segway Powersports Off-road vehicles will bring you a new driving experience.

For your driving safety, read this manual carefully before riding. This manual contains a large number of safety instructions, operation instructions, maintenance instructions and safety warnings.

Reading this manual will help you quickly understand the vehicle and help you with safe driving practices.

Periodic maintenance procedures are included in this manual and should be performed regularly to keep your vehicle running safely.

IMPORTANT NOTICE

This vehicle is designed and manufactured for off-road use and complies with all applicable noise, vibration and emission regulations.

Before driving the vehicle, please understand the local laws and regulations, choose the allowed road for driving and, abide by the local traffic regulations.

This manual is applicable to the Fugleman gasoline series and describes all equipment including optional components. Therefore, some of the optional equipment described in this manual may be not installed on your vehicle.

Bluetooth® is a registered trademark of Bluetooth Sig, Inc.
QR Codes® is a registered trademark of DENSO WAVE INCORPORATED. Unless noted, trademarks are the property of Segway Powersports Inc.

© Copyright 2021 Segway Powersports Inc.
All information contained within this publication is based on the latest product information at the time of publication. Due to constant improvements in the design and quality of production components, some minor discrepancies may result between the actual vehicle and the information presented in this publication. Depictions and/or procedures in this publication are intended for reference use only. No liability can be accepted for omissions or inaccuracies. Any reprinting or reuse of the depictions and/ or procedures contained within, whether whole or in part, is expressly prohibited.

If your vehicle needs any service and repair, please contact your Segway Powersports dealer to provide service.

TABLE OF CONTENTS

SAFETY INTRODUCTION	1
FEATURES AND CONTROLS	24
OPERATION	65
MAINTENANCE AND STORAGE	92
SPECIFICATIONS	158
TROUBLESHOOTING	166
EMISSION CONTROL SYSTEM	175

INTRODUCTION

BEFORE YOURIDE

This SEGWAY UTV is an off-road vehicle. Familiarize yourself with all laws and regulations concerning the operation of this vehicle in your area.

⚠ WARNING

Failure to adhere the warnings and safety precautions contained in this manual will result in severe injury or death. Your SEGWAY vehicle is not toy and it can be hazardous to operate. This vehicle handles differently than cars, trucks or on-road vehicles. A collision or rollover can occur quickly, even during routine maneuvers like turning, driving on hills or over obstacles if you fail to take proper precautions.

- Read the owner's manual that came with your vehicle.
- Understand all safety warnings, precautions and operating procedures before operating the vehicle.
- Keep this manual with the vehicle.
- Never operate this vehicle without proper instruction.
- Take an authorized training course. See the Safety Training section for more information.
- This vehicle is an **ADULT VEHICLE ONLY**. You **MUST** be at least age of 16 and have valid driving license to operate this vehicle.
- Always use the cab nets (or doors) when riding in this vehicle. Always keep hands, feet and all other body parts inside the vehicle at all times.

- Always wear a helmet, eye protection, gloves, long-sleeve shirt, long pants and over-the-ankle boots.
- Never operate this vehicle under the influence of drugs or alcohol, as these conditions impair judgment and reduce the operator's ability to react.
- Complete the new operator driving procedures outlined this manual. Never allow a guest to operate this vehicle until the guest has completed the new operator driving procedures.
- Never permit other person to operate this vehicle unless this person has completed a safety training, and reviewed the owner's manual and all safety labels.

The meaning of signs and safety warnings in this manual:

⚠ WARNING
WARNING indicates a hazardous situation which, if not avoided, could result in death or serious injury.

⚠ CAUTION
CAUTION, used with the safety alert symbol, indicates a hazardous situation which, if not avoided, could result in minor or moderate injury.

NOTICE
NOTICE is used to address practices not related to personal injury.

IMPORTANT
IMPORTANT provides key reminders during disassembly, assembly, and inspection of components.

This Sign indicates an action NOT to take in order to avoid a hazard.	This Sign indicates an action that NEEDS to be taken to avoid a hazard.

SAFETY INTRODUCTION

WARNING LABELS 3

SEVERE INJURY OR DEATH 8

IMPORTANT SAFETY INFORMATION 11

Reading the Manual 11

Safe Driving Age 12

Riding Equipment..... 13

Vehicle Modifications 16

Passengers..... 17

Contact with exhaust..... 18

Seat Belts 19

Cab Net Doors..... 19

Loading the Vehicle..... 20

No Passengers in the cargo box 21

Operating on Paved Roads..... 21

Operating on Public Roads 21

Operating at Excessive Speed 22

Turning Improperly 22

Jumps and Stunts..... 22

Improper hill climbing 22

Descending Hills Improperly 23

Crossing Hillsides 23

Fuel safety 23

Failure to follow the warnings and safety precautions in this manual may result in serious injury or death. It can be dangerous to operate off-road vehicles. These vehicles behave differently from other vehicles, such as motorcycles or automobiles. If proper precautions are not taken, a collision or rolled-over may occur even during normal maneuvers such as turning, climbing, or riding over obstacles. Understand all safety warnings, precautions and operating procedures described in this manual before operating the vehicle. Bring this manual with you.

WARNING LABELS

Warning labels are placed on the vehicle for your safety. Read and follow instructions on the warning labels carefully. If any of the labels depicted in this manual differ from the labels on your vehicle, always read and follow the instructions on the vehicle. If any label becomes illegible or comes off, contact Segway Powersports dealer to obtain a replacement.

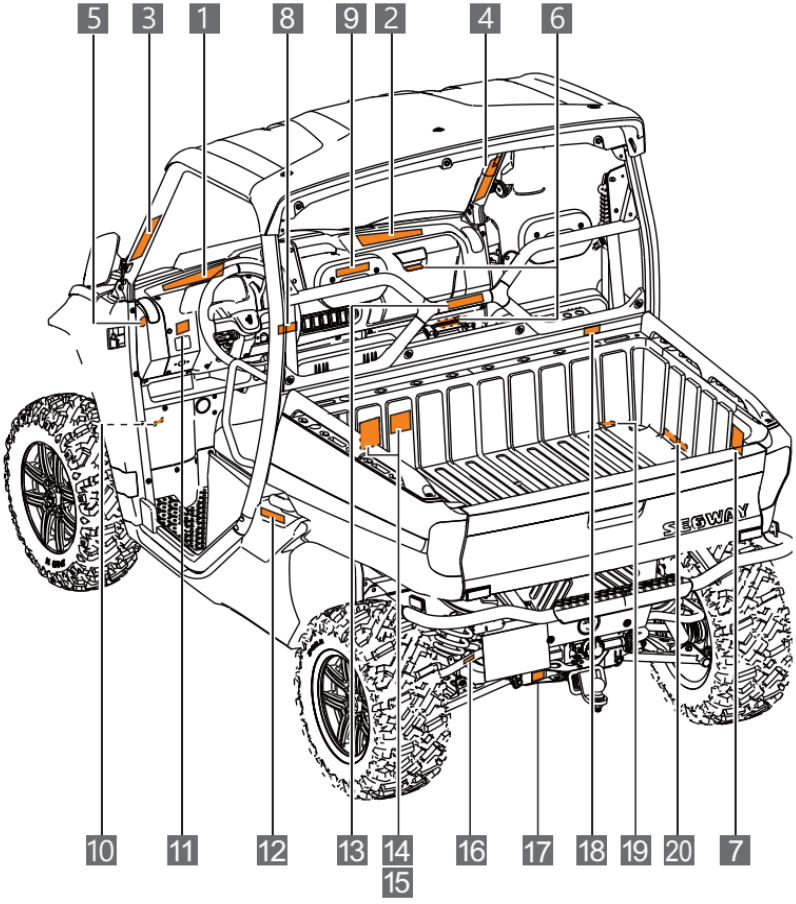
5
3
1
8
9
2
4
6
10
11
12
13
14
15
16
17
18
19
20
7

1

WARNING
Rollovers have caused severe injuries and death, even on flat, open areas.
Be Sure Riders Pay Attention and Plan Ahead
If you think or feel the vehicle may tip or roll, reduce your risk of injury: •Keep a firm grip on the steering wheel or handholds and brace yourself. •Do not put any part of your body outside of the vehicle for any reason.
Require Proper Use of Your Vehicle
Do your part to prevent injuries: •Do not allow careless or reckless driving. •Make sure operators are 16 or older with a valid driver's license. •Do not let people drive or ride after using alcohol or drugs. •Do not allow operation on public roads (unless designated for off-highway vehicle access) – collisions with cars and trucks can occur. •Do not exceed seating capacity: 2 occupants.
Improper Use of Off-Highway Vehicles Can Cause Severe Injury or Death
Be Prepared
•Fasten seat belts and make sure nets or doors are securely latched in place. •Wear an approved helmet and protective gear. •Each rider must be able to sit with back against seat, feet flat on the floor, and hands on steering wheel or handholds. Stay completely inside the vehicle.
DRIVER UNDER 16
Read and understand all safety labels, locate and read operator's manual.
Drive Responsibly
Avoid loss of control and rollovers: Avoid abrupt maneuvers, sideways sliding, skidding or fishtailing,and never do donuts.•Avoid hard acceleration when turning, even from a stop. • Slow down before entering a turn. • Plan for hills, rough terrain, ruts, and other changes in traction and terrain. Avoid paved surfaces. •Avoid side hilling (riding across slopes).
U09L10001004

2

WARNING
PASSENGER
Improper Use of this Vehicle Can Cause Severe Injury or Death
Be Prepared
• Fasten seat belt and make sure net or door is securely latched in place.
• Wear an approved helmet and protective gear.
You must be able to sit with back against seat, feet flat on the floor, and hands on handholds. Stay completely inside the vehicle.
Be Sure Riders Pay Attention and Plan Ahead
If you think or feel the vehicle may tip or roll, reduce your risk of injury:
• Keep a firm grip on handholds and brace yourself.
• Do not put any part of your body outside of the vehicle for any reason.
PASSENGER QUALIFICATIONS AND RESPONSIBILITIES
• Do not ride after using drugs or alcohol.
• Ask the operator to slow down or stop if you feel uncomfortable when riding.
U09L10001001

3

WARNING
Be prepared in case of rollover
If the vehicle rolls over, any part of your body (such as arms, legs, or head) outside of the cockpit can be crushed by the cab frame or other parts of the vehicle.
Fasten seat belt and make sure net and/or door is securely latched in place to help you avoid sticking out arms or legs.
NEVER Hold the cab frame while riding.
NEVER Try to stop a rollover using your arm or leg.
U09L10007001

4

WARNING
Be prepared in case of rollover
If the vehicle rolls over, any part of your body (such as arms, legs, or head) outside of the cockpit can be crushed by the cab frame or other parts of the vehicle.
Fasten seat belt and make sure net and/or door is securely latched in place to help you avoid sticking out arms or legs.
NEVER Hold the cab frame while riding.
NEVER Try to stop a rollover using your arm or leg.
U09L10006001

5

6

CAUTION
Storage compartment
Maximum load: 5 kg (11 lbs)
U09L10004004

7

WARNING
Never carry passengers in cargo box or on tailgate. Max weight on tailgate during loading is 90kg (200lb).
MAX
90kg/200lb
U09L10009004

8

WARNING

Parking:
Pull the parking brake outwards forcefully to park the vehicle.

Parking release:
Hold the parking brake handle and press the parking button, turn it clockwise and push the parking handle inward to the end, the parking brake is released, and the vehicle can be pushed at this time

U09L10016001

9

SEGWAY Technology Co., Ltd. certifies that this ROV complies with the American National Standard for Recreational Off-Highway Vehicles, ANSI / ROHVA 1 - 2016 Standard.

This roll over protective structure **meets the performance requirements of (EU) No 1322/2014 Annex VIII .**

U09L10005001

10

x 12

U09L10030001

11

WARNING

Turning the off road vehicle in 4WD-LOCK ("DIFF.LOCK") takes more effort.
Operate at a slow speed and allow extra time and distance for maneuvers to avoid loss of control.

U09L10003001

12

WARNING

- Keep hands, body, other persons away when closing bed.
- Do not operate the vehicle with bed up.

U09L10013001

13

WARNING

NEVER Attach to the cab frame to pull a load. This can cause the vehicle to tip over. Use only the trailer hitch or recovery hook to pull a load.

U09L10011001

14

WARNING

- Never carry passengers in cargo box.
- Passengers can be thrown off. This can cause serious injury or death.
- If total payload is greater than 227kg (500 lbs), the vehicle must be operated in LOW range.

IMPROPER TIRE PRESSURE OR OVERLOADING CAN CAUSE LOSS OF CONTROL. LOSS OF CONTROL CAN RESULT IN SEVERE INJURY OR DEATH.

- Reduce speed and allow greater distance for braking when carrying cargo.
- Overloading or carrying tall, off-center, or unsecured loads will increase your risk of losing control. Loads should be centered and carried as low as possible in box.
- For stability on rough or hilly terrain, reduce speed and cargo.

U09L10008004

15

WARNING

Improper tire pressure or overloading can cause loss of control.
Loss of control can result in severe injury or death.

- Cold tire pressure:
  Front: **15.0** psi (**103** kPa)
  Rear: **16.0** psi (**110** kPa)
- MAXIMUM WEIGHT CAPACITY:
  680 kg. (**1500** lbs)
- MAXIMUM CARGO BOX LOAD:
  350 kg. (**770** lbs)

U09L10010004

16

18

WARNING

Air Filter Inlet Grill. **DO NOT COVER!**

U09L10012001

17

WARNING

Improperly loading a trailer may cause loss of control. Evenly balance the load.

- Maximum unbraked towing mass **400 kg (882 lb)**
- Maximum unbraked tongue mass **110 kg (242 lb)**
- Maximum inertiabraked towing mass **700 kg (1543 lb)**
- Maximum inertiabraked tongue mass **110 kg (242 lb)**

U09L10015004

19

CAUTION

The air filter must be maintained in accordance with the requirements of the Segway《Owner's Manual》, otherwise it may seriously damage your engine.

U09L10032001

20

WARNING

- Keep hands, body, other persons away when closing bed.
- Do not operate the vehicle with bed up.

U09L10014001

SEVERE INJURY OR DEATH...

...can result if you do not follow these instructions:

- Minimum recommended age for driving this vehicle is 16 years.
- Never operate this vehicle without wearing an approved motorcycle helmet that fits properly.
- Wear eye protection (goggles or a face shield), gloves, over-the-ankle boots, long-sleeved shirt or jacket, and long pants.
- Never consume alcohol or drugs before or while operating this vehicle.
- Never attempt jumps, donuts and other stunts.
- Never operate at speeds too fast for your skills or the conditions. Always go at a speed that is proper for the terrain, visibility, operating conditions, and your experience.
- Always inspect your vehicle each time you use it to be sure it is in safe operating condition.
- Never operate on excessively rough, slippery, or loose terrain until you have learned and practiced the skills necessary to control the vehicle on such terrain. Always be cautious on these kinds of terrain.
- Always follow the inspection and maintenance procedures as well as the schedules described in this manual.
- Never operate on hills that are slippery or ones where you will not be able to see safely far enough ahead of you. Never go over the top of a hill at speed if you cannot see what is on other side.
- Always keep both hands, arms, feet, and legs inside the vehicle during operation. Keep your feet on the floorboard. Never hold onto the enclosure, otherwise you could be injured.

- Always keep both hands on the steering wheel when driving.
- Always go slowly and be careful when operating on unfamiliar terrain. Always be alert to changing terrain conditions when driving the vehicle.
- Never wrap your thumbs and fingers around the steering wheel. This is particularly important when driving in rough terrain. The front wheels will move right and left as they respond to the terrain, and this movement will be felt in the steering wheel. A sudden jolt could wrench the steering wheel around, and your thumbs or fingers could be injured if they are in the way of the steering wheel spokes.
- Never turn at excessive speeds. Practice turning at slow speeds before attempting to turn at faster speeds. Do not attempt turns on steep inclines.
- Always follow proper procedures for going uphill. If you lose control and cannot continue up a hill, back down the hill with the engine in reverse gear. Use engine braking to help you go slowly. If necessary, use the brakes gradually to help you go slowly.
- Never operate the vehicle on hills that are too steep. Go straight up and down hills where possible.
- Never operate the vehicle in fast flowing water or water deeper than the floorboards on this model. Remember that wet brakes may have reduced stopping ability. Test your brakes after leaving water. If necessary, apply the brake several times to let friction dry out the brake linings.
- Always be sure there are no obstacles or people are behind you when you operate in reverse. When it is safe to proceed in reverse, go slowly.
- Always check terrain before going down hills. Go as slowly as possible. Never go down a hill at high speed.

- Always check for obstacles before operating in a new area.
- Do not brake abruptly when carrying loads in the cargo bed.
- Always use the size and type of tires specified in this manual.
- Always maintain proper tire pressure as described in this manual.
- Never exceed maximum cargo load capacity. Cargo should be as far forward in the cargo bed as possible, and distributed evenly from side to side. Be sure cargo is secured so that it cannot move around during operation. Reduce your speed and follow instructions in this manual for carrying cargo or pulling a trailer. Allow a greater distance for braking.
- Brake discs can be over heated after continuous braking. Allow brake disc to cool before servicing.
- Avoid the risks related to contact with hot surfaces, including risks when filling oil or coolant in hot engines or transmissions.

IMPORTANT SAFETY INFORMATION

Reading the manual

⚠ WARNING

Driving this vehicle improperly increases the risk of accident. The driver must know how to drive the vehicle correctly in different situations and on different terrain.

Before driving the vehicle, all drivers must complete safety training course. Ensure that every driver has read this manual and all warning labels, and has absolved the safety training course. Otherwise, the vehicle will not be allowed to drive.

Safe driving age

WARNING

The minimum recommended driving age for this vehicle is 16 years. Children under the age of 16 cannot not operate this vehicle. Do not drive the vehicle without proper driving training. Training courses are required. Please ensure that each driver has read this manual and all product labels and has completed a safety training course.

Riding equipment

WARNING

For your safety, we strongly recommend that you always wear an approved motorcycle, eye protection, boots, gloves, long pants, and a long-sleeved shirt or jacket whenever you ride.

Although complete protection is not possible, wearing proper gear can reduce the chance of injury when you ride.

Helmet

Wearing a helmet can prevent head injuries. At all times, you must wear a helmet that meets basic safety standards when driving. The ECE mark consists of a circle around the letter E, followed by the approved area codes for different countries. The approval number and serial number are also displayed in the label.

Riding Gear

Sturdy motorcycle boots to help protect your feet, ankles, and lower legs.

Motorcycle gloves to help protect your hands.

It is recommended to wear riding pants with knee and hip pads, a riding jersey with padded elbows and chest / shoulder protector.

WARNING

Driving vehicle when drinking or taking drugs may adversely affect a driver's judgment, reaction time, balance, and feelings. Do not drink alcohol or take drugs before or during driving.

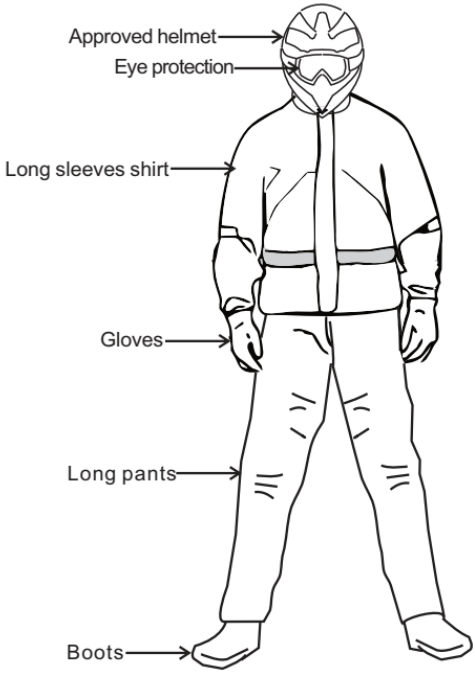

USING ALCOHOL OR DRUGS

WARNING

Operating this vehicle after consuming alcohol or drugs could adversely affect operator judgment, reaction time, balance and perception.

Never consume alcohol or drugs before or while operating this vehicle.

Vehicle Modifications

WARNING

Do not attempt to increase vehicle speed or use any equipment that increases the power of the vehicle. If any equipment is added to the vehicle, or if any modifications are made to the vehicle to increase vehicle speed or power, the vehicle warranty is terminated. Adding of certain parts may change the handling of the vehicle, including (but not limited to) mowers, sledges, tires, sprayers, or large luggage racks.

Passengers

WARNING

Do not carry passengers until you have operated the vehicle for at least two hours and have completed the new operator driving instructions mentioned on page 69. Passengers must always sit in the passenger seats with the seat belt secured. Carrying more than one passenger in a two-seater vehicle affects the operator's ability to operate and control the vehicle, increasing the risk of loss of control and accidents, or rollovers.

Contact with exhaust

WARNING

Engine gases are toxic and can cause loss of consciousness or death in a short time. Do not start or run a motor in a closed space. The engine exhaust of this product contains chemicals that cause cancer, birth defects or other reproductive damage, and you can only drive it outside the room or in a well-ventilated place.

Seat Belts

Riding in this vehicle without wearing the seat belts may increase the risk of serious injury in the event of rollover, loss of control, accident, or sudden stop. Seat belts may reduce the severity of injury in these cases. The operator must wear the seat belt at all times.

Cab Net Doors

Riding in this vehicle without closed and latched door nets increases the risk of serious injury or death in the event of an accident or rollover. Always make sure that all door nets are closed and latched when driving this vehicle. Door nets are not intended to be used as arm rests. Always keep hands and feet inside the vehicle.

Loading the vehicle

The weight of cargo and passengers affects the handling and stability of the vehicle. For your own safety and the safety of others, think carefully about how to safely operate the vehicle when loaded with passengers and cargo. Follow the instructions in this manual for loading, tire pressure, gear selection and speed.

- Maximum loading capacity of the vehicle is mentioned in this manual and on the vehicle labels. As more passenger weight is added, the cargo weight may need to be reduced accordingly. Do not exceed the vehicle's weight capacity.
- Recommended tire pressures are listed in the instruction section of this manual and on the vehicle label.

Always follow the following guidelines:

Under these conditions:	Do all of these steps:
Operator and/or cargo exceeds half of the maximum weight capacity	1. Slow down 2. Verify tire pressure 3. Use extra caution when riding
Operating in rough terrain	
Operating over obstacles	
Climbing	
Towing a trailer	

No Passengers in the cargo box

Passengers in the cargo box may cause the vehicle fall over or collide, which may cause injury or more serious accidents. Never let passengers in the cargo box when operating the vehicle. Passenger must be seated in passenger seat with fastened seat belt.

Operating on Paved roads

The tires of this vehicle are designed for off-road use only, not for use on paved roads. Operating this vehicle on paved roads (including sidewalks, paths, parking lots and driveways) may adversely affect handling of the vehicle and may increase the risk of loss of control and accidents or rollover. Avoid operating the vehicle on paved roads. If it's unavoidable, drive slowly and avoid sudden turns or stops.

Operating on Public Roads

Operating this vehicle on public streets, highways or highway could result in a collision with another vehicle. When operating on public roads, including dirt and gravel roads, ride with extreme attention.

Riding at excessive speeds

Operating this vehicle at excessive speeds increases the operator's risk of losing control. Always operate at a speed that's appropriate for terrain, the visibility, operating conditions and your skills and experience.

Turning improperly

Turning improperly could cause loss of traction, loss of control, accidents or rollover. Always follow proper procedures for turning as described in this manual.

Avoid sharp turns. Never turn while applying heavy throttle. Never make abrupt steering maneuvers. Practice turning at slow speeds before attempting to turn at higher speed.

Jumps and stunts

Exhibition driving increases the risk of an accident or rollover. DO NOT do power slides, "donuts", jumps or other driving stunts. Avoid exhibition driving.

Improper hill climbing

Improper hill climbing could cause loss of control or rollover. Use extra caution when operating on hills. Always follow proper procedures for hill climbing as described in this manual. See page 74.

Descending hills improperly

Improper descending a hill could cause loss of control or rollover. Always follow proper procedures for traveling down hills as described in this manual. See page 75.

Crossing hillsides

Driving on a sidehill is not recommended. Improper operation could cause the loss of control or rollover. Avoid crossing the side of any hill unless absolutely necessary. If crossing a hillside is unavoidable, always follow proper procedures as described in this manual. See page 76.

Fuel safety

Attention: Gasoline is very flammable!

- You must be extremely careful when handling gasoline.
- When refueling, the engine must be shut off and must be done outdoors or in a well-ventilated area.
- No smoking, no open flames or sparks at or near the refueling or gasoline storage location.
- Do not overflow when refueling. Do not fill the tank to the filler neck.
- If gasoline gets on your skin or clothes, wash them with soap and water immediately and change clothes.

FEATURES AND CONTROLS

VEHICLE ACTIVATION 26

Vehicle unlocked 27

APP Function 28

PARTS AND CONTROLS 29

FRONT PANEL 31

Ignition Lock/Start Button 31

Combination Switch 32

Turn Signal Control Lever 34

Headlight Switch 35

Toggle switch for 2WD / 4WD drive 36

Electric Power Steering（EPS） 38

12V Accessory outlets 39

Seat 40

Driver seat adjustment 40

Driver seat removal/installation 41

Passenger Seat removal 42

Steering wheel adjustment 43

Seat belts 44

Door (safety nets) 46

Safety Nets 46

Storage Boxes 47

Fuel cap 48

Gear Selector 49

Brake and Accelerator pedal 50

Parking brake 52

Roll-Over Protective Structure (ROPS) 53

VEHICLE DEVICE

INSTRUMENT PANEL..... 54
Indicator Lights / Warning Lights..... 55
Diagnostic display codes 59

VEHICLE ACTIVATION

This vehicle is equipped with vehicle DTS system for you. DTS is used to communicate with background system and mobile APP, so as to obtain vehicle information and control vehicle with mobile APP. This is an optional system. In order to make you quickly familiar with and use the system, read the user's manual carefully, understand the relevant operation and use information.

NOTICE
The new vehicle must be activated on the APP for the first time if equipped with DTS. Otherwise the engine will not start.

IOS mobile phone: search "**Segway Powersports**" to download application from APP STORE.
Android mobile phone: go on Google Play and then search for "**Segway Powersports**" to download application.

After the successful installation of the application, your vehicle will be registered and activated. Firstly, find the VIN number on the vehicle and register it in the application. The registration procedure is as follows:

1. Power the vehicle with the mechanical key.

Input or scan vehicle VIN number as application prompts, and step on the vehicle brake at the same time.

Note: If the VIN number cannot be scanned due to low light, you can enter VIN number manually. VIN number is located on the frame (page 158), or on the Identification Plate (page 160).

2. Click "**CONFIRM**" to complete the vehicle registration.
3. Click "**START**" to start the vehicle.

Unlocking the vehicle

There are three ways to unlock your vehicle:

1. **Mechanical key** (preferred).
2. **APP remote unlock vehicle**

APP Remote Unlock is based on 4G network. As long as the area is covered by the network, you can use the remote unlock function in the APP to unlock the vehicle.

3. **APP Bluetooth unlock vehicle**

When both the vehicle and the mobile phone are on, within the effective connection distance of the Bluetooth signal, the vehicle Bluetooth module will automatically unlock the vehicle after acquiring the mobile phone Bluetooth signal, and automatically lock the vehicle when the mobile phone is far away.

NOTICE
After using mechanical key to turn the vehicle off, vehicle cannot be unlocked remotely again. You need to disconnect the pairing and reconnect your Bluetooth device again to restart the vehicle.

Mechanical key unlock is the optimal unlocking method for vehicle. If you do not want to use the remote unlock function, the remote unlocking option can be turned off in the APP.

Segway Powersports APP Function

This application is a program designed for users who have the Segway Powersports vehicles.

Main features:

Driving controls analysis, vehicle data analysis etc.

For detail information see Segway Powersports APP User Manual.

PARTS AND CONTROLS

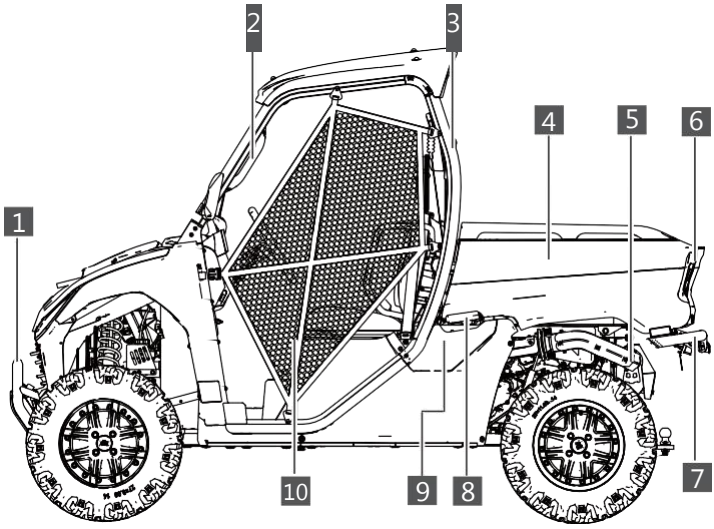

1 Front Bumper
2 Handrails
3 ROPS
4 Cargo Box
5 Muffler
6 Tailgate
7 Rear Bumper
8 Cargo Box Flip Handle
9 Fuel Cap
10 Cab Net/Door

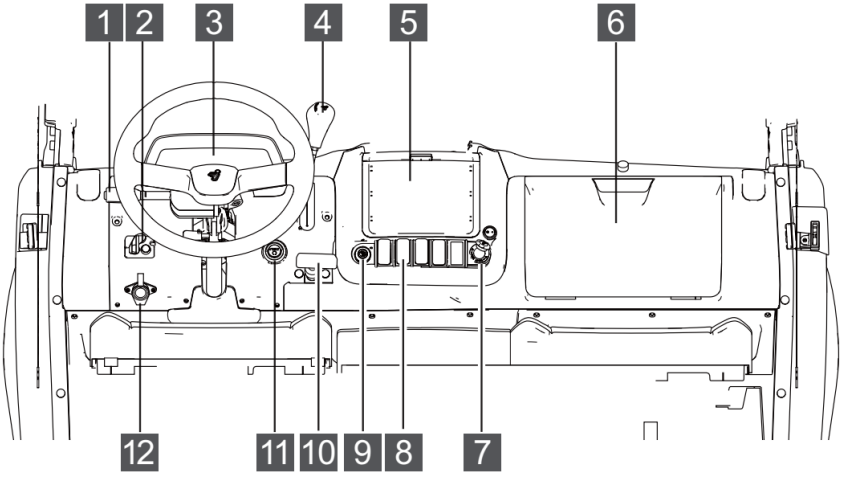

1 Lights Switch

2 Drive Select Switch

3 Instrument panel

4 Gear Shifter/Selector

5 Storage Box

6 Storage Box

7 USB outlet

8 Engine mode switch

9 Ignition Switch

10 Parking Brake

11 Start Button

12 12V Accessory outlet

FRONT PANEL

Ignition Lock/Start Button

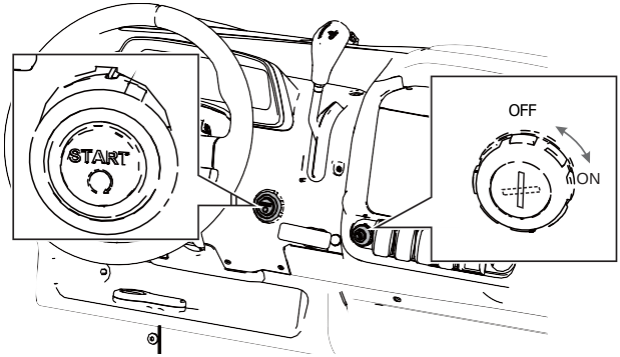

Ignition Lock

Turn the key to the "ON" position: the vehicle is energized and the electrical components of the vehicle can be used.

Turn the key to the position “OFF”: the whole vehicle circuit is disconnected and the engine stops. When the switch is in the off position, the key can be taken out of the switch.

Start Switch

Turn the key to the ignition switch "ON" position, press the Engine Start/Stop“ ”, press the start switch and the engine will start.

Switches

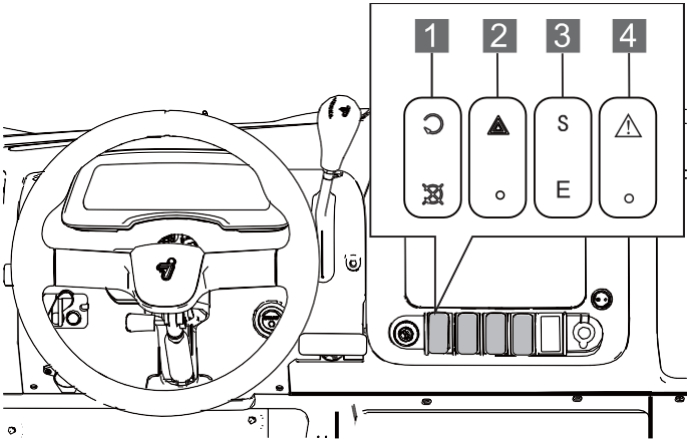

1 **Engine On/Off**
2 **Warning flashers**
3 **Engine mode Switch**
4 **Override Switch**

Engine On/Off Switch

" ": Engine Start " ": Engine Stop

Starting the engine

1. Press the brake pedal and select "P" or "N" gear.
2. Turn the ignition key into "ON" position.
3. Press the Engine On Switch "".
4. Press the Start button for 1,5 - 2 seconds. Engine will start.

Stopping the vehicle

1. Move the shift lever in "P" position and apply parking brake.
2. Press the Engine Off switch " ", and the engine will stop.

Warning flashers

Use this switch when the vehicle is in an emergency. Press the switch to the " " position to turn the warning flashers on, and press the switch to "●" position to turn the warning flashers off.

" ": Warning flashers on

" ● ": Warning flashers off

Use this switch only when the vehicle is in an emergency:

- Temporary parking of the vehicle
- The vehicle is malfunctioning
- The vehicle encounters other emergencies

Engine mode Switch

" S ": Sport mode

This mode can increase engine RPM, increase the power, the speed is faster, and the fuel consumption is higher. It is not recommended to start the engine in this mode.

" E ": Economic mode

While still ensuring sufficient engine power, this mode can effectively allow to save fuel, increase vehicle range, and enhance fuel economy.

Speed Limiter Override Switch

" ": Temporarily disables the speed limiter when operating in reverse, or in 4WD-LOCK mode (30km/h limit).
Use only when needed.

Combination Switch

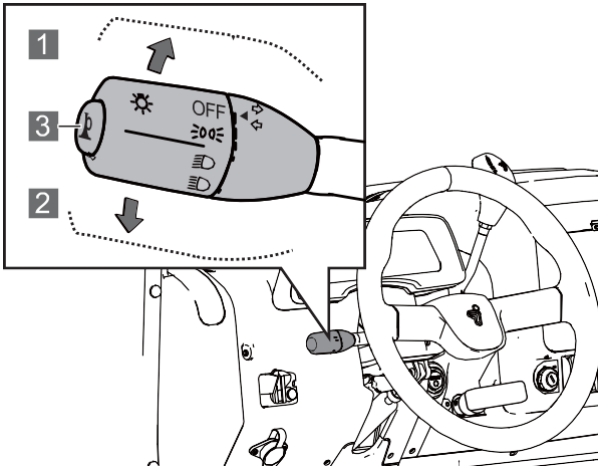

1 Push the control lever up to turn the right turn signal lights on; the right turn indicator on the instrument panel flashes.

2 Push the control lever down to turn the left turn signal lights on; left turn indicator on the instrument panel flashes.

3 Horn switch

Headlights Switch

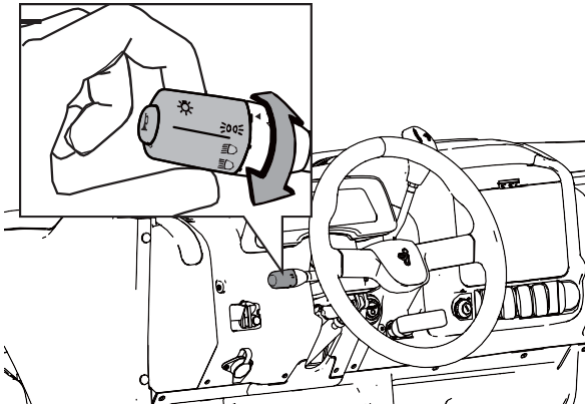

As shown in the picture above, turn the end of the lever to turn the lights on.

"": Front position lights, tail lights, license plate lights and dashboard lights are on.

"": Turn the switch to this position to select low beam.

"": Turn the switch to this position to select high beam. High beam control light on the instrument panel lights up.

"OFF": Turns the lights off

"": Horn switch

Toggle switch for 2WD / 4WD drive

Models with rear gearcase

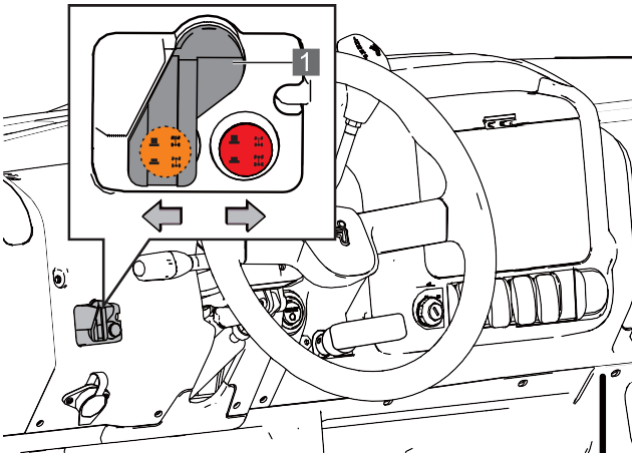

1 **Toggle switch**

2 x 4 mode

When the switch is in the two-wheel mode, the vehicle is only driven by the rear wheels, and the front wheels have no power. The meter shows symbol " " for the 2x4 drive. This mode is suitable for driving on flat roads.

4 x 4 mode

When the 4-wheel drive switch is pressed, 4-wheel drive symbol " " is displayed on the instrument panel. At this time, the UTV is in the 4-wheel drive, with power output to the front wheels and to the rear wheels. This mode is suitable for muddy conditions, mountain regions and other bad road conditions.

4×4 locked mode

When the 4-Wheel Locked switch is pressed, the four-wheel drive lock symbol " " is displayed on the instrument panel. At this time, the differential lock is engaged. The front wheels have power output, the rear wheels have power output, and the left and right rear wheels have the same speed and power. The vehicle will start speed limitation, and the maximum speed is limited to 30km/h. This mode is suitable for riding in difficult conditions.

WARNING

- **Before using the front or rear differential lock, or when changing drive mode from 2x4 to 4x4 and vice versa, stop the vehicle completely and ride again only after the gears properly engage.**

- **Driving in 4x4 mode with locked front differential lock can be dangerous. When driving with locked front differential, reduce your speed and allow for greater maneuvering distance. Locking the front differential can unexpectedly change handling characteristics of the ATV. Expect a slower turning and respect the changed handling characteristics. If you cannot make a sharp enough turn for the speed you are traveling, you may lose control, which can lead to an accident.**

- **With the locked front differential, maximum speed is limited to 30 km/h.**

Models with the rear differential lock

Drive mode selection

2x4 - Rear wheel drive

When to use	Driven wheels	Note
• Normal driving on a level surface • In light terrain • On hard surfaces • When driving on roads	• Only the rear wheels are driven • Rear differential is active • Rear wheels turn at different speeds in corners	• Saves tires • Terrain, ground and grass friendly

2x4 LOCK - Rear wheel drive with locked rear differential

When to use	Driven wheels	Note
• On gravel and unpaved surfaces • In difficult terrain • If you need power on both rear wheels	• Both rear wheels are driven evenly • Rear differential is locked • Rear wheels turn at same speed in corners	• More traction compared to 2x4 mode

4x4 - All wheel drive

When to use	Driven wheels	Note
• In rough terrain where you expect that 2x4 LOCK drive will not be sufficient. • For driving with loads and in hills • On soft and slippery surfaces • If the rear wheels are slipping • If you need power on all wheels	• All wheels are driven • Front differential is active, rear differential is locked • Rear wheels turn at same speed in corners	• Practically double the traction than in 2x4 LOCK mode • Use this mode only for the necessary time

4x4 - All wheel drive with locked front and rear differential

When to use	Driven wheels	Note
• For short-term use in heavy terrain and extreme conditions • When two or more wheels are slipping • When getting the machine out of problems • For driving with loads in hills	• All wheels are driven without differential function • All wheels turn at same speed in corners	• Maximum traction available • ATV can change its handling • Max. speed limit 30 km/h • Use this mode only for the necessary length of time

Electronic Power Steering (EPS)

The power steering is active when the engine is running.

NOTICE
When the key is turned to ON position, the EPS warning indicator lights up briefly. Refer to page 59.

After the ignition switch is turned to "OFF", EPS system will be turned off. If the EPS indicator continues to lit after the engine is started, EPS system has failed. Contact your Segway Powersports dealer.

12V Accessory Outlets

The vehicle is equipped with two 12V accessory outlets located in the dash central panel.

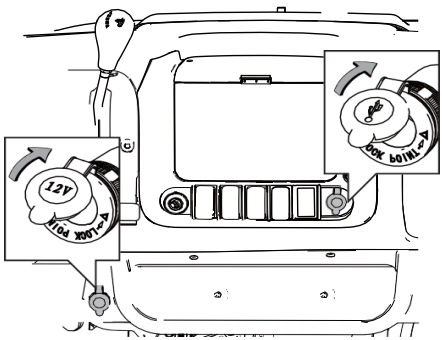

Left: 12V Accessory outlet **Right: USB outlet**

12V Accessory outlet can be used to power 12V accessories that are rated less than 10A. To use the outlet, open the rubber cover. Both outlets are on when the ignition lock is in "ON" position.

SEATS

Driver's seat can be adjusted forwards and backwards before driving. Adjust the position of the seat so that the driver's back can touch the seat back, and the driver's feet can step on the brake and accelerator pedals.

Driver seat adjustment

There is a U-shaped adjusting handle at the front of the seat. Pull this handle upwards by hand.

Keep sliding the seat forward or backward to find the desired position. Release the handle. Seat will lock in the new position.

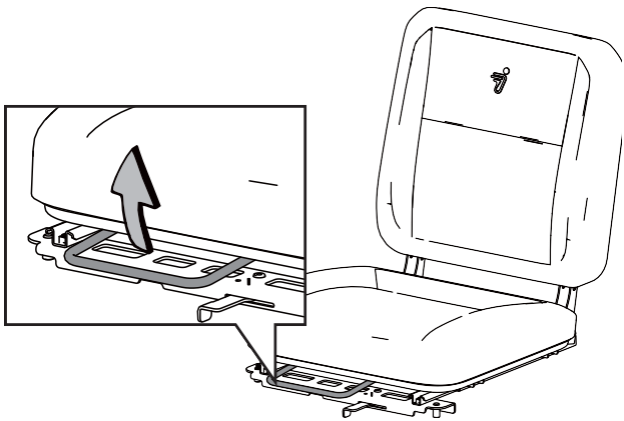

Seat adjusting handle

Driver seat removal/installation

Driver seat removal

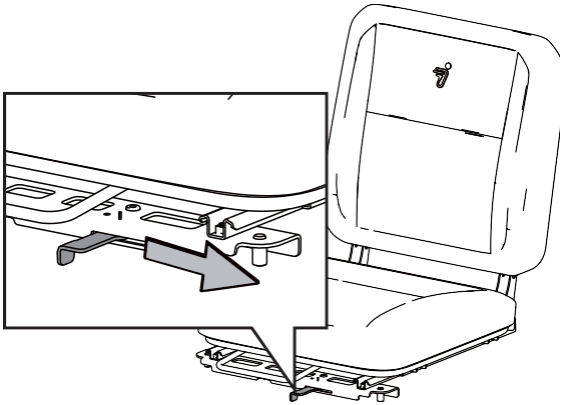

Seat lock

1. Move the seat lock to the right.
2. Gently pull the seat forward, and pull out the cable connector under the seat.
3. Remove the seat from the vehicle.

Driver seat installation

1. Plug the cable connector under the seat.
2. Insert the two fixing pins behind the seat into the hooks.
3. Turn the seat lock to lock the seat to the frame;

After installation, check whether the seat is installed correctly to ensure the driver's safety.

Passenger seat removal

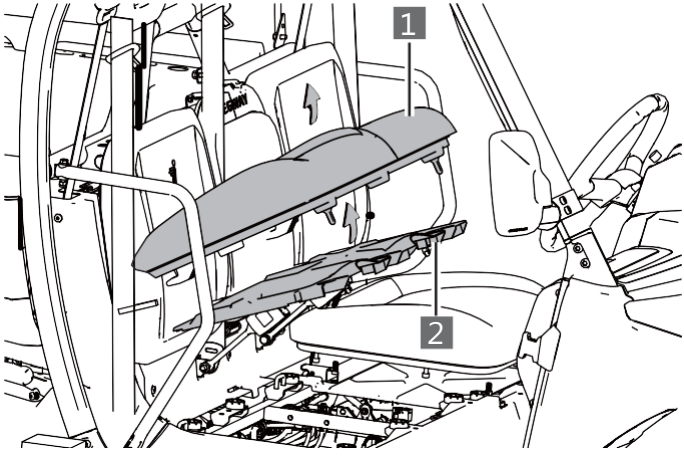

1 **Passenger seat** 2 **Passenger seat cover**

Lift front of the passenger seat to remove the seat from the vehicle.

Seat cover is located under the passenger seat. After the passenger seat is removed, hold the seat cover with both hands, move it upwards and remove the seat cover.

The battery and a storage compartment are located under the passenger seat cover.

Steering wheel adjustment

Steering wheel can be tilted up or down for driver's preference.

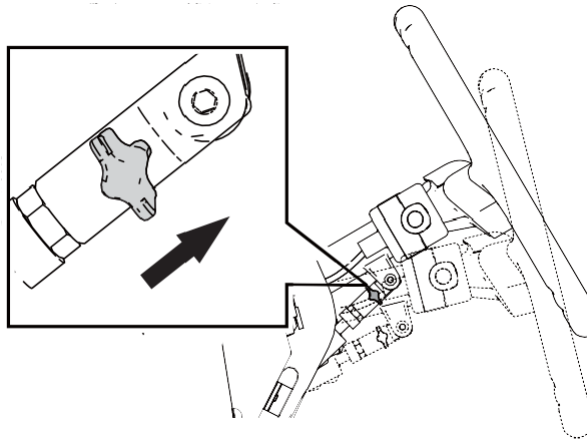

Steering wheel adjustment:

After raising the steering column adjustment lever toward the steering wheel, do not loosen it.

Move the steering wheel up or down to adjust to a suitable position, hold the steering wheel, and release the adjustment lever.

After adjusting, check whether the steering wheel is firm.

WARNING

Do not adjust the steering wheel when driving.

Otherwise, it may cause the driver to control errors, which may result in accident, serious injury or death.

Seat belts

Fasten your seat belt as soon as you get in the vehicle. The seat belt can effectively protect the driver and the passenger.

In the event of an accident, the seat belt can reduce the risk of injuries. To fasten seat belt correctly:

◆ Stretch the shoulder buckle so that it covers the entire shoulder, but do not touch the neck or slipping off the shoulder.

◆ Place the waist buckle as low as possible across the hip.

◆ Sit up straight with your back against the seat.

◆ Do not twist the seat belt.

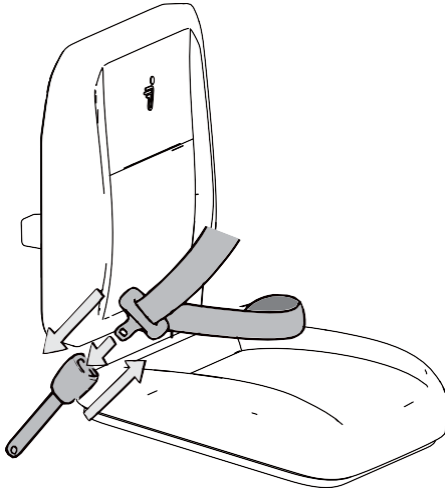

Insert the lock tab into the buckle until you hear a click to fasten the seat belt.

Press the release button to release the seat belt.

⚠ CAUTION

Before every ride, check that all seat belts are working properly.

1. **Push the latch plate into the buckle until it clicks.**
2. **Pull out each seat belt and check for any damage, including cutting, grinding, damage, wear or stiffness. If any damage is found, contact Segway Powersports dealer for replacement.**
3. **Clean the dirt or debris from the seat belt, wipe the belt with mild soap and water. Never use bleach, dyes or household detergents.**

Doors / Safety nets

Whether this vehicle is equipped with a side doors or a safety nets, the door must be closed before driving and safety nets must be secured.

In the event of an accident or rollover, the risk of serious injury or death will increase without closing or locking the doors / nets.

Before every ride, be sure to check the wear and tear of the doors, door latches or safety nets and their locks.

Replace any worn or damaged parts immediately. New parts can be obtained from your authorized Segway Powersports dealer.

Safety nets

The safety net has five fixed points, the front lock is movable, and the remaining four are fixed and cannot be quickly removed.

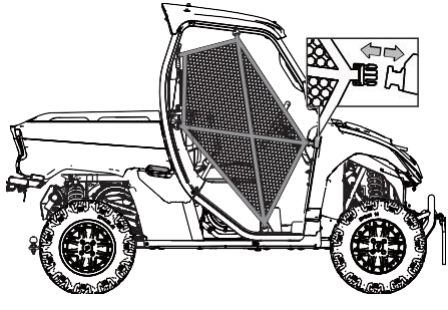

Securing the net

Insert lock latch of safety net in the fixing point when you are in the cab.

Opening the net

Loosen front lock latch of safety net before leaving the cab.

Storage boxes

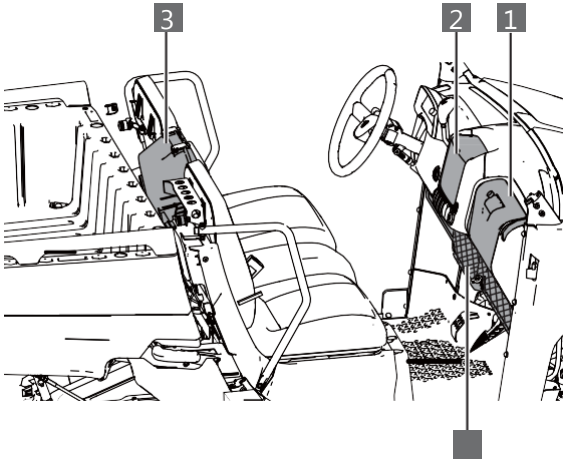

1 **Front storage box**

Tools are placed in this box.

2 **Central storage box**

3 **Passenger seat storage box**

This box is removable. Click the upper part of the box and lift it out. At the same time release the clips and remove the box.

4 **Central lower storage box**

WARNING

Keep the storage box closed if you do not use it. Or you will be possibly hurt by the objects in the storage box, or if you open it in emergency brake or turning, resulting in accident.

Fuel cap

WARNING

Always use Unleaded gasoline with 95 octanes.

Do not smoke when refueling or it may ignite the fuel and cause fire.

Do not touch other people or stuff with static electricity or it may cause static electricity accumulation and ignite the fuel.

Do not overfill the fuel tank.

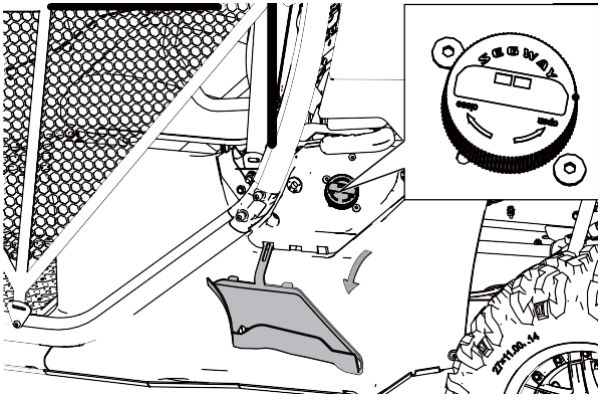

1. Hold the cover and pull it out.
2. Turn out the cap in the "OPEN" direction (see arrow on the cap)
3. Refuel (do not overfill)
4. Turn the cap in the "CLOSE" direction.

Gear Selector

Different operation modes correspond to different gears. After selecting the gear, check the indicator light on the instrument panel to ensure that the gear has been switched to the desired position. See the image below for the gear selector position:

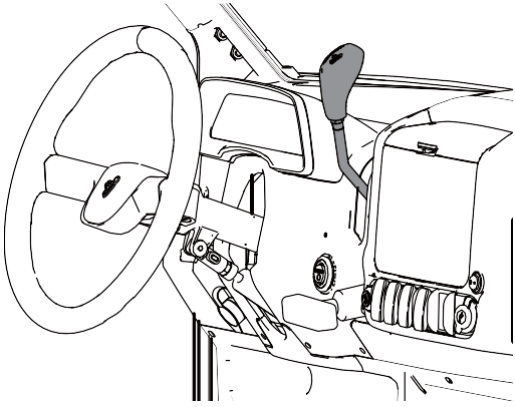

L Low speed

H High speed

N Neutral

R Reverse

P Parking

⚠ CAUTION

The transmission will be damaged when you change the gear if the engine is running over the idle speed, or when the vehicle is moving.

Put the gear selector into "P" position and lock parking brake when you leave the vehicle.

Brake and accelerator pedal

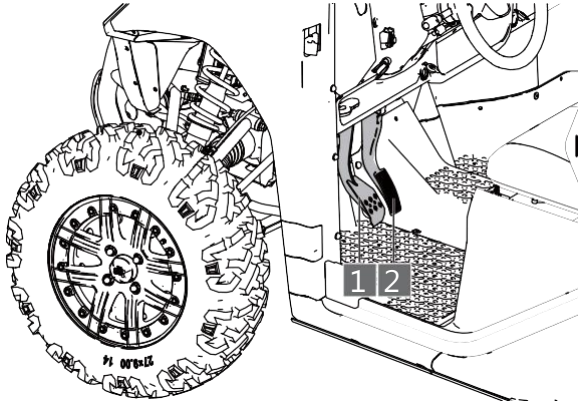

1 **Brake pedal** 2 **Accelerator pedal**

Brake pedal

Step on brake pedal 1 to select gear, reduce speed, or stop the vehicle. Step on the brake pedal when you start the engine.

If you want to reduce speed or stop the vehicle, step on the brake pedal with your right foot.

The brake pedal is spring loaded type. It will return to its original position if released.

Accelerator pedal

Step on accelerator pedal 2 to increase the engine speed. If you want to increase or keep your speed, use your right foot to hold the accelerator pedal.

If you want to decrease speed, loosen accelerator pedal.

The accelerator pedal is spring loaded. It will return to its original position if no force is on it (idle speed).

When released, the spring pressure returns the pedal to the rest position. Before starting the engine, be sure to check if accelerator pedal returns normally.

CAUTION

If the accelerator pedal and the brake pedal are applied at the same time, engine power will be limited.

Parking brake

Whenever you leave the vehicle, the parking brake must be turned on to put the parking system in working status.

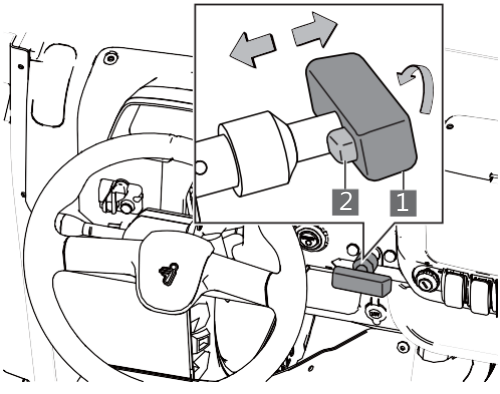

1 **Parking brake handle** 2 **Parking brake button**

Turn on the parking brake:

When parking the vehicle, step on the brake pedal to stop the vehicle, and then hold the parking brake T-shaped handle with your hand and pull it up, until your foot releases the brake. The vehicle stands still when the parking brake is on.

Release the parking brake:

Press the lock button with your index finger while holding the T-shaped handle, rotate it 90 degrees clockwise, and push the parking handle down to release the parking brake.

⚠ CAUTION
When leaving the vehicle, parking brake must be engaged.

Roll-Over Protective Structure (ROPS)

The rollover protection device (ROPS) of this vehicle meets EU requirements No. 1322/2014 Annex VIII - rollover performance.

If there is any damage to the roll-over protection cage, contact Segway Powersports dealer.

The dealer thoroughly inspects the ROPS or replaces it.

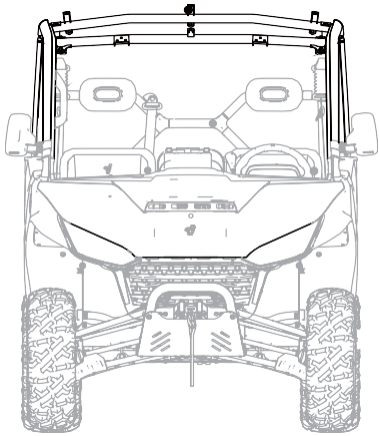

No device can assure occupant protection in the event of a rollover. When used with seat belts and cab nets or doors, the ROPS helps prevent occupants from being ejected from the vehicle. Always follow all safe operating practices outlined in this manual to avoid vehicle rollover.

⚠ WARNING

Vehicle rollover could cause severe injury or death. Always avoid operating in a way that could result in vehicle rollover.

INSTRUMENT PANEL

Instrument panel provides the operator with the vehicle information. Driver should understand the meaning of the various indicators, warning lights and display information on the instrument panel to understand the vehicle status.

NOTICE
Instrument panel may be damaged by using a high-pressure washer. Do not clean the instrument panel with alcohol or corrosive detergents. Corrosive liquids will damage the surface of the instrument panel.

Indicator Lights/Warning Lights

Indicator lights and warning lights on the instrument panel indicate the status of the vehicle systems. The figure below shows all the lights and warning lights.

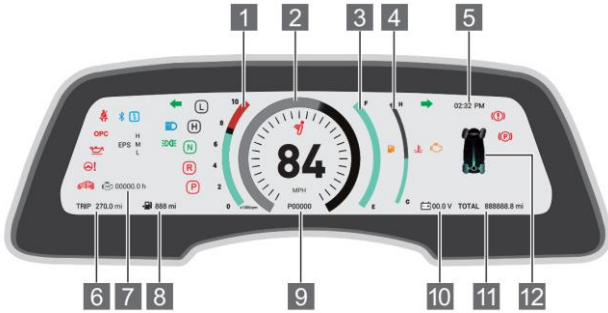

If ignition switch is set to "ON", the indicators are switched on, and all warnings are on. The light will be briefly lit for 1 sec.

1 Engine tachometer

Engine tachometer displays the real-time RPM of the engine.

0→2→4→6→8→10 (from low to high rpm)

2 Speedometer

Displays actual speed of the vehicle.

3 Fuel gauge

E: Fuel tank empty F: Fuel tank full

Shows the fuel level in the fuel tank. When the last segment clears, the low fuel warning is activated. All segments including the fuel symbol will flash. Refuel immediately.

4 Engine Water Temperature

Thermometer shows engine water temperature.

C - Engine temperature is low

H - Engine temperature is high

5 Clock

After the vehicle is bound to the Segway Powersports APP, the time displayed on the dashboard will be automatically synchronized to the local time.

6 Trip meter

The dashboard doesn´t have the function for clearing Trip meter. Please clear the Trip meter via Segway Powersports APP.

7 Engine Running Time

Displays total engine running time.

8 Fuel Range

Displays approximate mileage that can be driven with the remaining fuel.

9 Fault Code Display

In case of partial failure of the vehicle, the fault code is displayed in this area. See page 59 for detailed description of fault codes.

10 Battery Voltage

Displays voltage of the vehicle battery.

11 Total Mileage

Displays total mileage ridden by the vehicle.

12 4x4 Switch & Differential Lock

2 x4 mode

4 x4 mode

4×4 locked mode

Indicator light/Warning indicators

Light	Instructions	Status
	Safety Belt	This light reminds the operator to ensure that all riders wear helmets and safety belts before work. The driver's seat belt is equipped with a seat belt interlocking device. If the seat belt is not secured, the vehicle speed will be limited to 24 km/h.
OPC	Off-Seat	When the driver leaves the seat and park break not applied, the OPC light will be on and the buzzer will sound.
	Oil Pressure	This light is on when oil pressure is too low.
	EPS System	Indicates a failure in EPS system (optional equipment, if equipped)
	Brake System	• Low brake fluid level • The braking system is faulty
	Parking Brake	This light is on after parking brake is applied.
	Engine Failure	This indicator appears if an EFI-related fault occurs. Do not operate the vehicle if this warning appears. Serious engine damage could result.

	Coolant Temperature	Indicator light showing excessive temperature of engine coolant. When it lights up and alarms, the engine should be stopped immediately and shut down. After cooling down to normal temperature, engine should continue to run.
	Left Turn	This light is lit when the left turn signal is turned on.
	High Beam	This light is on when the headlamp switch is set to High beam.
	Position light	The front light, tail light, license plate light and instrument panel light are on.
	Right turn indicator	This light is lit when the right turn signal is turned on.
	Power iconon Bluetooth	This light is on when phone is connected via Bluetooth.
	Remote Power on	When the ignition is switched on, the APP on your mobile phone is switched on and this light comes on.
EPS H M L	EPS mode	EPS mode was set in the APP and the rider´s preferred mode was selected: **H** - Comfort mode, maximum steering assist **M** - Normal mode, medium steering assist **L** - Motion mode, low steering assist

Diagnostic display codes

This area displays the code information of electrical components and vehicle circuit´s issues. In case of failure or abnormality, contact your dealer.

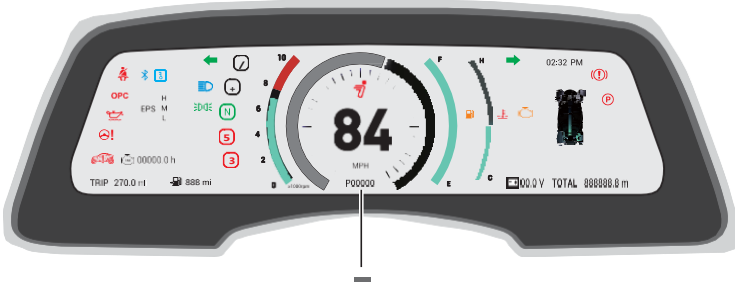

1 **Fault Code Display Area**

System	Failure Code	Failure Description
ECU	P0108 17	Manifold Absolute Pressure/Barometric Pressure Circuit High
	P0107 16	Manifold Absolute Pressure/Barometric Pressure Circuit Low
	P010C 17	Mass or Volume Air Flow “B” Circuit Low
	P010D 16	Mass or Volume Air Flow “B” Circuit High
	P0113 17	Intake Air Temperature Sensor 1 Circuit High
	P0112 16	Intake Air Temperature Sensor 1 Circuit Low
	P0118 17	Engine Coolant Temperature Sensor 1 Circuit High
	P0117 16	Engine Coolant Temperature Sensor 1 Circuit Low
	P0650 11	MIL Control Circuit Low
	P0650 13	MIL Control Circuit Open
	P0692 12	Fan 1 Control Circuit High

ECU	P0691 11	Fan 1 Control Circuit Low
	P0480 13	Fan 1 Control Circuit
	P0629 12	Fuel Pump “A” Control Circuit High
	P0628 11	Fuel Pump “A” Control Circuit Low
	P0627 13	Fuel Pump “A” Control Circuit /Open
	P0459 12	Evaporative Emission System Purge Control Valve Circuit High
	P0458 11	Evaporative Emission System Purge Control Valve Circuit Low
	P0444 13	Evaporative Emission System Purge Control Valve Circuit Open
	P0412 12	Secondary Air Injection System Switching Valve “A” Circuit
	P0414 11	Secondary Air Injection System Switching Valve “A” Circuit Shorted
	P0413 13	Secondary Air Injection System Switching Valve “A” Circuit Open
	P0262 12	Cylinder 1 Injector Circuit High
	P0261 11	Cylinder 1 Injector Circuit Low
	P0201 13	Injector Circuit/Open – Cylinder 1
	P0265 12	Cylinder 2 Injector Circuit High
	P0264 11	Cylinder 2 Injector Circuit Low
	P0202 13	Injector Circuit/Open – Cylinder 2
	P0563 17	System Voltage High
	P0562 16	System Voltage Low
	P0560 1C	System Voltage Not plausible
	P0501 29	Vehicle Speed Sensor “A” Range/Performance
	P0641 00	Sensor Reference Voltage “A” Circuit/Open
	P0651 00	Sensor Reference Voltage “B” Circuit/Open
	P0571 29	Brake Switch “A” Circuit
	P0571 1C	Brake Switch “A” Circuit
	P0123 17	Throttle/Pedal Position Sensor/Switch “A” Circuit High

ECU	P0122 16	Throttle/Pedal Position Sensor/Switch “A” Circuit Low
	P0121 29	Throttle/Pedal Position Sensor/Switch “A” Circuit Range/Performance
	P0223 17	Throttle/Pedal Position Sensor/Switch “B” Circuit High
	P0222 16	Throttle/Pedal Position Sensor/Switch “B” Circuit Low
	P0221 29	Throttle/Pedal Position Sensor/Switch “B” Circuit Range/Performance
	P2106 12	Throttle Actuator Control System Forced Limited Power
	P2106 19	Throttle Actuator Control System Forced Limited Power
	P2106 92	Throttle Actuator Control System Forced Limited Power
	P2106 13	Throttle Actuator Control System Forced Limited Power
	P1568 00	Idle Speed Contr.Throttle Pos. mechanical Malfunction
	P1545 00	Throttle Pos.Contr. Malfunction
	P1545 22	Throttle Pos.Contr. Malfunction
	P1545 21	Throttle Pos.Contr. Malfunction
	P1565 00	Idle Speed Control Throttle Position lower limit not attained
	P2123 17	Throttle/Pedal Position Sensor/Switch “D” Circuit High
	P2122 16	Throttle/Pedal Position Sensor/Switch “D” Circuit Low
	P2138 29	Throttle/Pedal Position Sensor/Switch “D”/“E” Voltage Correlation
	P2128 17	Throttle/Pedal Position Sensor/Switch “E” Circuit High
	P2127 16	Throttle/Pedal Position Sensor/Switch “E” Circuit Low
	P0606 94	ECM/PCM Processor
	P0606 92	ECM/PCM Processor
	P2106 29	Throttle Actuator Control System Forced Limited Power
	P0606 64	ECM/PCM Processor
	P0606 61	ECM/PCM Processor
	P0606 67	ECM/PCM Processor
	P0606 1C	ECM/PCM Processor
	P0606 55	ECM/PCM Processor

ECU	P0606 00	ECM/PCM Processor
	P0606 62	ECM/PCM Processor
	P0606 96	Function monitoring: fault of ECU ADC - Null Load Test Pulse
	P0606 97	function monitoring: fault of ECU ADC - test voltage
	P0606 47	function monitoring:fault of ECU monitoring modul error
	P0606 17	Reported OverVoltage of VDD5
	P0606 16	Reported UnderVoltage of VDD5
	P0606 49	Diagnostic fault check to report “WDA active”
	P0606 48	Diagnostic fault check to report “WDA active” due to errors in query-/response communication
	P0606 91	Diagnostic fault check to report “WDA active” due to overvoltage detection
	P0032 12	O2 Sensor Heater Control Circuit High Bank 1 Sensor 1
	P0031 11	O2 Sensor Heater Control Circuit Low Bank 1 Sensor 1
	P0030 13	O2 Sensor Heater Control Circuit Bank 1 Sensor 1
	P0132 17	O2 Sensor Circuit High Voltage Bank 1 Sensor 1
	P0131 16	O2 Sensor Circuit Low Voltage Bank 1 Sensor 1
	P0130 29	O2 Sensor Circuit Bank 1 Sensor 1
	P0134 13	O2 Sensor Circuit No Activity Detected Bank 1 Sensor 1
	P0052 12	O2 Sensor Heater Control Circuit High Bank 2 Sensor 1
	P0051 11	O2 Sensor Heater Control Circuit Low Bank 2 Sensor 1
	P0050 13	O2 Sensor Heater Control Circuit Bank 2 Sensor 2
	P0152 17	O2 Sensor Circuit High Voltage Bank 2 Sensor 1
	P0151 16	O2 Sensor Circuit Low Voltage Bank 2 Sensor 1
	P0150 29	O2 Sensor Circuit Bank 2 Sensor 1
	P0154 13	O2 Sensor Circuit No Activity Detected Bank 2 Sensor 1
	U0073 88	Control Module Communication Bus Off
	U0140 87	Lost Communication With Body Control Module
	U0121 87	Lost Communication With Anti-Lock Brake System (ABS) Control Module

EPS	E0001	No midpoint of torque is written
	E0002	No end point of rotor angle is written
	E0003	Memory read write failure
	E0004	The main torque sensor is disconnected
	E0005	Abnormal output of main torque sensor
	E0006	The secondary torque sensor is disconnected
	E0007	Abnormal output of secondary torque sensor
	E0008	The difference between main and secondary torques is too large
	E0009	The difference between the main torque before and after amplification is too large
	E0010	Electrical machinery unassisted
	E0011	Over electric current
	E0012	Abnormal busbar electric current
	E0013	CAN communication abnormal (Output abnormally)
	E0014	Rotor Angle jump
	E0015	The rotor Angle sensor is disconnected
	E0016	Power module failure
	E0017	Abnormal A phase electric current
	E0018	Abnormal C phase electric current
	E0019	Steering wheel Angle small gear abnormal
	E0020	Steering wheel Angle middle gear abnormal
	E0021	Steering wheel Angle jumps
	E0022	Steering wheel Angle value exceeds limit
	E0023	The steering wheel Angle is not right
	E0024	Abnormal voltage at electrical machinery end

T-BOX	T0001	GPS module failure
	T0002	4G module failure
	T0003	Bluetooth module failure
	T0004	Sensor failure
	T0005	Power CAN failure
	T0006	Body CAN failure
ABS	A0001	Left front wheel speed error signal
	A0002	Right front wheel speed error signal
	A0003	Left rear wheel speed error signal
	A0004	Right rear wheel speed error signal
	A0005	Voltage of ABS module is too high
	A0006	Voltage of ABS module is too low
	A0007	Vehicle speed single failure
	A0008	CAN single failure

OPERATION

BASIC DRIVING GUIDE 67

Trail etiquette 67

Know your riding area 68

Vehicle Break-In Period 68

Brake System Break-In Period 68

Drive Belt Break-In Period 68

New Operator Driving Procedures 69

Driving with Passengers 70

Starting the Vehicle 71

Parking the Vehicle 71

Braking 71

Parking the vehicle 72

Driving on Slippery Surfaces 72

Driving through water.....73

Driving in reverse 74

Driving over obstacles.....74

Driving uphill 74

Driving downhill 75

Driving on a sidehill (sidehilling).....76

Parking on an incline.....76

Parking the vehicle 76

Engine Break-In Guidelines 77

PRE-RIDE INSPECTION 78

HAULING CARGO..... 80

Belt life.....82

Towing loads.....82

OPERATION

Maximum loading capacity 83
Dumping the cargo box 83
Loading guidelines 84
Trailer 85
WINCH OPERATION 86
Winch Operation 90

This section provides basic operating instructions, including how to start and stop the vehicle, driving skills and precautions when driving on different road ways.

Even if you've ridden other off-road vehicles, you must take time to familiarize yourself with how this vehicle operates. Practice in flat and wide areas until you are familiar with this utility vehicle.

⚠ WARNING

Failure to inspect and verify that the vehicle is in safe operating condition before ride increases the risk of an accident. Always perform Pre-Ride Inspection outlined in the Operation chapter before every use of your vehicle to make sure it's in safe operating condition. Always follow inspection and maintenance procedures and schedules described in this manual. See the Periodic Maintenance section of the Maintenance chapter.

BASIC DRIVING GUIDE

Trail Etiquette

Always practice good etiquette when riding. Allow a safe distance between your vehicle and other vehicles operating in the same area. Communicate to oncoming operators by signaling the number of vehicles in your group. When stopping, move your vehicle to the side of the trail as far as possible to allow others to pass safely.

Know your riding area

Familiarize yourself with all laws and regulations concerning the operation of this vehicle in your area. Respect the environment in which you ride your vehicle.

Find out where the designated riding areas are by contacting your dealer, a local riding club, or local officials. Help keep our trails open for recreational vehicle use.

Engine break-in period

Your vehicle's break-in period is the first **25 hours** of operation. Careful running-in the new engine and driveline components will improve performance and service life of these components. Follow these steps carefully.

Brake system break-in period

In order to achieve the best braking performance, the brake must be broken-in for about 200 km.

Heavy or excessive braking, when the braking system is new, may damage brake pads and brake discs.

Drive Belt break-in period

Proper break-in of the CVT clutch and drive belt will ensure longer service life and better clutch performance. Break-in the clutch and belt at low speeds for the recommended time, only pulling light loads. Avoid violent acceleration and high speed riding during break-in period. If the belt is broken, be sure to clean also intake and outlet pipelines and all debris from the CVT clutch and engine compartments during the belt replacement.

New Operator Driving Procedures

1. Before operating this vehicle, read and understand the owner's manual and all warning and instruction labels.
2. Perform pre-ride check.
3. Do not carry goods during this period.
4. Do not carry passengers until you have driven this vehicle for at least 2 hours.
5. Choose a suitable wide open area to familiarize yourself with the operation of the vehicle.
6. Safety helmets, eye protection, gloves, long-sleeved shirts, trousers, ankle boots and safety belts must be worn at all times.
7. When driving this vehicle, make sure that all doors are closed and locked.
8. Sit in the driver's seat, fasten the seat belt, and put the transmission into the "P" position.
9. Step on the brake pedal and release the parking brake.
10. Start the engine.
11. Put the transmission into Low gear (L).
12. Check your surroundings and determine your driving route.
13. Hold the steering wheel with both hands, slowly release the brake, depress the accelerator with your right foot, and start driving.
14. Drive slowly at first, and practice starting, stopping, turning, maneuvering, using the accelerator, brakes, and reversing on a flat ground. When learning how the vehicle operates, practice left and right turns at a slow speed.
15. When you make a turn proficiently and start to run at a faster speed, observe the following precautions:

Avoid sharp turns:

- **Don't turn when stepping on the accelerator pedal.**
- **Don't swerve when driving the vehicle.**
- **Operate according to your skills, conditions and terrain.**
- **Do not perform jumps or any other stunts.**

Driving with Passengers

1. Finish the overview of the new operator driver on the page 69.
2. Pre-ride check. Refer to the page 78.
3. Don't carry more than one passenger in a two-seat vehicle. Any additional passenger will affect the operator's ability to drive and control the vehicle.
4. All riders must be able to sit with their backs on the seat, with their feet on the floor, and their hands on the steering wheel (driver) or on the passenger arm rest/grab bar (passenger).
5. Driver and passenger must both wear helmets, eye protection, gloves, long-sleeved shirts, long trousers, ankle boots and have seat belts fastened. Refer to page 13.
6. Ensure all cab doors are closed and locked when driving.
7. Passenger can only sit in the passenger seat when driving.
8. Slow down. Always travel at a speeds that are appropriate for your and passengers' abilities and operating conditions. Avoid unexpected or aggressive maneuvers that could cause discomfort or injury to passenger.
9. Vehicle handling may change with passengers and/or cargo on board. Allow more time and distance for braking.

Starting the Vehicle

1. Depress the brake pedal when the gear is in "P" or "N" gear;
2. Turn the ignition key to "ON" position.
3. Press the Engine switch "⟲"
4. Press "Start" button for 1,5 - 2 seconds. Engine will start.

Before starting the engine be sure your wear the helmet and other safety equipment, ensure the doors / safety nets are closed and that both driver and passenger have fastened their seat belts.

Parking the Vehicle

1. Press the brake pedal and put the shifter into "P" position.
2. Turn the key to the " OFF " position (P. 31) and take the key out.
3. Apply parking brake (P. 52)

Braking

1. Release the throttle pedal completely.

NOTICE
When the throttle pedal is released completely and engine rpm slows down to near idle, the vehicle has no engine braking.

2. Press on the brake pedal evenly and firmly.
3. Practice starting and stopping (using the brakes) until you're familiar with the controls.

Parking the vehicle

1. Stop the vehicle on a level surface. When parking in the garage or in other structure, be sure that the area is well ventilated and that the vehicle is not close to any source of flame or sparks, including appliances with pilot light.
2. Place the transmission in PARK "P".
3. Stop the engine.
4. Slowly release the brake pedal and make sure the transmission is in PARK before exiting the vehicle.
5. Remove the ignition key to prevent unauthorized use.

Driving on Slippery Surfaces

Whenever riding on slippery surfaces such as wet trails or loose gravel, or during freezing weather, follow these precautions:

1. Do not operate on excessively rough, slippery or loose terrain.
2. Slow down when entering slippery areas.
3. Engage 4x4 drive before wheels begin to lose traction.

NOTICE
Severe damage to drive train may occur if the 4x4 drive is engaged while the wheels are still spinning. Allow the wheels to stop completely before engaging 4x4 drive. **Engage the 4x4 drive before the wheels begin to lose traction.**

4. Maintain a high level of alertness, reading the trail and avoiding quick, sharp turns, which can cause skids.
5. Correct a skid by turning the steering wheel in the direction of the skid. Never apply the brakes during a skid.

Driving through water

Your vehicle can operate through water with a maximum recommended depth equal to floor level. Follow these precautions when operating through water:

NOTICE

Major engine damage can result if the vehicle is not thoroughly inspected after operating in water. Perform the services outlined in the Periodic Maintenance Chart. The following areas need special attention: engine oil, transmission oil, differential oil and all grease fittings. If the vehicle tips or overturns in water, or if the engine stops during or after operating in water, service is required before starting the engine. Your dealer can provide this service. If it's impossible to bring the vehicle in before starting the engine, perform the service outlined in the Drying the CVT section of this manual, and take the vehicle in for service at the first opportunity.

1. Determine water depth and current before entering water.
2. Choose a crossing where both banks have gradual inclines.
3. Avoid operating through deep or fast-flowing water.
4. After leaving the water, test the brakes. Apply them lightly several times while driving slowly. Friction will help dry out the pads.

   If it’s unavoidable to enter water deeper than the floor:

   1. Proceed slowly. Avoid rocks and obstacles.
   2. Maintain steady speed. Do not make sudden turns or stops. Do not make sudden throttle changes.

Driving in reverse

Follow these precautions when operating in reverse:

1. Always check for obstacles or people behind the vehicle.
2. Apply the throttle lightly. Never open the throttle suddenly.
3. Back slowly.
4. Apply the brakes lightly for stopping.
5. Avoid making sharp turns.

NOTICE
Your model is equipped with a safety speed limiter when reversing – system Override. Do not use the Override button unless you really need more power. Use the Override button with caution, do not apply throttle when pressing the button, and then apply only as much throttle as is absolutely necessary.

Driving over obstacles

Follow these precautions when operating over obstacles:

1. Before operating in a new area, check for obstacles.
2. Watch out for bumps, potholes and other obstacles.
3. When you approach any obstacle, reduce your speed and be prepared to stop.
4. Never try to ride over large obstacles, such as large rocks or fallen logs.
5. Always have a passenger dismount before operating over an obstacle that could cause a fall from the vehicle or vehicle tip over.

Driving uphill

Braking and handling are greatly affected when operating in hilly terrain. Improper procedure could cause loss of control or rollover. Whenever traveling uphill, follow these precautions:

1. Always move the 4x4 switch to 4x4 (if equipped) before ascending or descending a hill.
2. Always travel straight uphill.
3. Keep both feet on the floor.
4. Always check the terrain carefully before ascending any hill. Never climb hills with excessively slippery or loose surfaces.
5. Proceed at a steady speed and steady throttle. Never open the throttle suddenly.
6. Never go over the crest of a hill at high speed. An obstacle, a sharp drop, or another vehicle or person could be on the other side of the hill.

Driving downhill

When driving downhill, follow these precautions:

1. Avoid excessively steep hills.
2. Always move the 4x4 switch to 4x4 (if equipped) before ascending or descending a hill.
3. Drive straight downhill. Avoid descending a hill at an angle, which would cause the vehicle to lean sharply to one side. Travel straight downhill when possible.
4. Slow down.
5. Apply the brakes slightly to help slowing.

Driving on a sidehill (sidehilling)

Driving on a sidehill is not recommended. Improper procedure could cause loss of control or overturn. Avoid crossing the side of any hill unless absolutely necessary.

If crossing a sidehill is unavoidable:

1. Slow down.
2. Exercise extreme caution.
3. Avoid crossing the side of a steep hill.

Parking on an incline

Avoid parking on an incline if possible. If it's unavoidable, follow these precautions:

1. Stop the engine.
2. Place the transmission in PARK.
3. Lock the parking brake.
4. Always block the rear wheels on the downhill side.

Parking the vehicle

1. Stop the vehicle on a level surface. When parking inside a garage or other structure, be sure that the structure is well ventilated and that the vehicle is not close to any source of flame or sparks, including any appliance with pilot lights.
2. Place the transmission in PARK.
3. Turn the engine off.
4. Engage the parking brake (if equipped).

5. Slowly release the brake pedal and make sure the transmission is in PARK before exiting the vehicle.
6. Remove the ignition key to prevent unauthorized use.

Engine Break-In Guidelines

The engine break-in period is 25 hours. During break-in:

- Avoid full throttle.
- Avoid pressing the gas pedal more than ¾ of travel.
- Avoid continuous acceleration.

The brakes need a 200 km break-in period.

New brakes will not operate at their maximum efficiency until the break-in period is over. Brake performance may be compromised if not followed.

NOTICE
During this period avoid full-throttle operation, rapid acceleration, and riding in constant rpm.

PRE-RIDE INSPECTION

Perform a pre-ride inspection before every ride to detect any potential problem that could occur during operation. The pre-ride inspection will help you monitor components wear and deterioration before they become a problem.

Correct any problems that you discover to reduce the risk of a breakdown or accident.

Inspection items:

Item	Note	Page
Brake system/pedal travel	Ensure proper operation	P50
Brake fluid	Ensure appropriate level	P122
Front suspension	Check and lubricate if necessary	P129
Rear suspension	Check and lubricate if necessary	P129
Tires	Check status and pressure	P124
Wheels/fasteners	Check to ensure the tightness of fasteners	P126
Nuts, bolts, fasteners	Check to make sure it's tight	——
Fuel	Ensure appropriate level	P48
Engine oil	Ensure appropriate level	P107
Coolant level	Ensure appropriate level	P119
Coolant pipe	Check leakage	——
Throttle	Ensure proper operation	——
Primary air intake screen	Check, clean	P136
Front headlight	Check operation	P134
Brake light/taillight	Check operation	——

Seat belt	**Check the length of the seat belt for damage and check whether the latch is in normal operation**	**P44**
Net / doors	**Inspect doors and latches for wear or damage**	**P46**

HAULING CARGO

WARNING

Overloading the vehicle or carrying cargo improperly can alter vehicle handling and may cause loss of control or braking instability. Always follow these precautions when hauling cargo:

Never exceed the stated load capacity for this vehicle.

Reduce speed and allow for greater distances for braking when hauling a cargo.

Never exceed the maximum weight capacity of the vehicle. When determining the weight you are adding to the vehicle, include the weight of the operator, passenger(s), accessories and loads in the rack or box. The combined weight of these items must not exceed the maximum weight capacity.

Always load the cargo box with the load as far forward and as low as possible.

When operating over rough or hilly terrain, reduce speed and cargo to maintain stable driving conditions.

Always operate the vehicle with extreme care when hauling cargo. Slow down and drive in the lowest gear available.

! WARNING

SECURE ALL LOADS BEFORE OPERATING. Unsecured loads can create unstable operating conditions, which could result in loss of control of the vehicle.

OPERATE ONLY WITH STABLE AND SAFELY ARRANGED LOADS. When transporting off-centered loads that cannot be centered, securely fasten the load and operate with extra caution.

HEAVY LOADS CAN CAUSE BRAKING AND CONTROL PROBLEMS. Use extreme caution when applying brakes with a loaded vehicle. Avoid terrain or situations that may require backing downhill.

USE EXTREME CAUTION when operating with loads that extend over the cargo box sides. Stability and maneuverability may be adversely affected, causing a rollover.

DO NOT TRAVEL FASTER THAN THE RECOMMENDED SPEEDS. Vehicle should never exceed 16 km/h when towing a load on a level surface. Vehicle speed should never exceed 8 km/h when towing in rough terrain, while cornering, or while ascending or descending a hill.

Never exceed 70 km/h if total payload exceeds 227 kg. Carrying a passenger in the cargo box could result in a fall from the vehicle or contact with moving objects. Never allow a passenger to ride in the cargo box.

Your vehicle is designed to carry or tow specific capacities only. Reduce speed and allow greater distance for braking when carrying cargo.

Load should be centered and placed as low as possible in the cargo box. For stability on rough or hilly terrain, reduce both speed and cargo. Ride with caution if the load extends over the sides of the box.

Always read and understand the load distribution warnings on vehicle labels and in this manual. Never exceed maximum capacities specified for your vehicle.

Belt life

To extend belt life, use low gear when hauling or towing heavy loads.

Towing loads

WARNING

Towing improperly can alter vehicle handling and may cause loss of control or brake instability.

Always follow these precautions when towing:

1. Never load more than 100 kg of tongue weight on the trailer hitch.
2. When towing a vehicle, place the towed vehicle transmission in neutral. Do not go faster than 16 km/h when towing.
3. Towing a trailer increases braking distance. Do not ride faster than 16 km/h when towing a trailer.
4. Do not tow more than the recommended weight for the vehicle.
5. Attach a trailer to the trailer hitch only. Do not attach a trailer to any other part of the vehicle; this could result in loss of control.
6. The total weight of operator, passenger, accessories, cargo and weight on the hitch must not exceed the maximum weight capacity of the vehicle.

Maximum loading capacity

Never exceed maximum loading capacities!

	Fugleman UT10
Maximum weight capacity	680 kg
Maximum cargo load	350 kg
Maximum unbraked towing mass	400 kg
Maximum braked towing mass	700 kg
Maximum unbraked tongue mass	110 kg
Maximum braked tongue mass	110 kg

Dumping the cargo box

To dump the cargo box:

1. Select a level site to dump the cargo box. Do not attempt to dump or unload the vehicle when parked on an incline.
2. Apply the brakes.
3. Set the parking brake.
4. Turn the key to the off position.
5. Dismount the vehicle.
6. Ensure that the cargo is positioned evenly or toward the front of the cargo box.

WARNING

If the weight distribution on the cargo box is located toward the rear of the box when the release lever is pulled forward, the box may dump unexpectedly and cause serious injury to the operator or bystanders. Never operate the dump lever without ensuring that the load is positioned evenly or at the front of the box.

7. Release the tailgate latches.
8. Stand clear and pull the cargo box release lever up.
9. Lift the front of the cargo box to dump the cargo.
10. Lower the cargo box and push down securely to latch.
11. Close the tailgate and secure both tailgate latches.

WARNING

Operating the vehicle while the cargo box is raised could result in severe injury. The box could close unexpectedly and cause injury to the driver or passenger. The rear tires will also catch the rear of a raised box, damaging the vehicle and creating hazardous driving conditions. Never operate this vehicle with the cargo box in the raised position.

Loading guidelines

When transporting cargo, follow these instructions:

1. Do not exceed the weight specified in the warning labels and this manual.
2. Don't allow passengers to sit in the cargo box.
3. Make sure cargo is properly secured before riding.
4. Avoid riding on steep slopes when carrying cargo or pulling a trailer.
5. Use low-speed gear when hauling heavy cargo.
6. When riding with cargo, operate the vehicle with caution.

Trailer

When towing a load, bear in mind that the towing weight does not include the towing device.

- The total load (weight of the operator, accessories, cargo and trailer) shall not exceed maximum capacity of the vehicle.

Where a designated attachment point is provided on the tow bar:

Either:

Pass the cable through the attachment point and clip it back on itself.

Or:

Attach the clip directly to the designated point. This alternative must be specially permitted by the trailer manufacturer since the clip may not be sufficiently strong for use in this way.

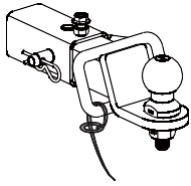

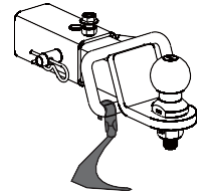

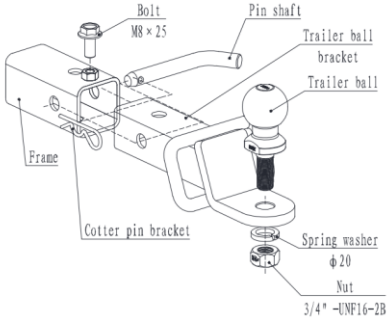

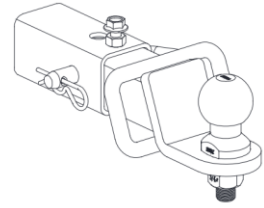

WINCH OPERATION

If your vehicle is equipped with a winch, read this chapter before winch installation and use to understand and familiarize yourself with the safety precautions and operating instructions.

⚠ WARNING

The user must read and understand the operating instructions and warnings in this manual.

If the instructions or warnings are not followed, serious property damage or personal injury may occur.

- It's strictly prohibited for children under the age of 16 to use the winch.
- Before or during operation, pay attention to the safety and environmental conditions within winch operating range.
- Do not overload. Ensure that all equipment used meets the maximum rope pull force rating. We recommend using an optional pulley block, double rope using a pulley block double rope will help reduce the load on the winch, rope and battery. When using a double rope, the rated value of the pulley block should be two times the rope pull of the winch rating.
- Under heavy loads, do not operate the winch for long periods of time. Electric winches are only designed for intermittent use and, should not be used under constant load. Do not pull for more than one minute. If the winch motor feels very hot, stop the winch and let it cool down for a few minutes.
- The rope end cannot bear the full load when fully extended. Always be sure that at least five (5) full turns of winch rope are wrapped around the winch drum.
- Avoid pulling from extreme angles, as this will cause the rope

to be rolled on one end of the barrel and may damage the rope or winch.

- Note that the rope-drawing capacity of the winch is the maximum rope-drawing capacity of the first layer. Do not operate the winch with overload capacity past this amount of rope.
- Never hook the rope back to itself, otherwise the rope will become damaged. Use trunk protection protector.
- Before operation, make sure that the winch is firmly installed on the vehicle or bracket.
- Before moving heavy objects, check the rope to prevent kinks and uneven wire layers. The rope slack must be properly tightened under a weight of about 50 Kg.
- When pulling the load, be sure to place a protective layer on the rope near the hook end. This will help to prevent serious injuries and damage if the rope breaks.

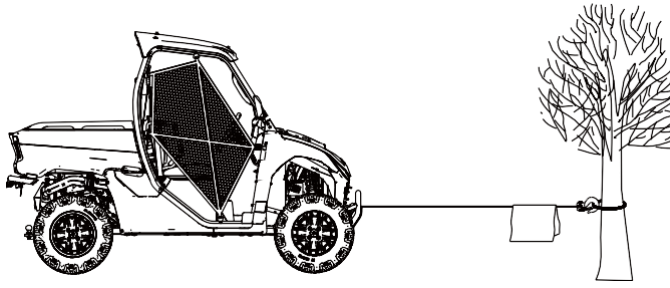

- Do not move the vehicle to assist in hauling heavy objects, it's easy to overload the winch and cause damage to the rope.
- Stay away from the danger area during winch operation. The dangerous area is the area of winch drum, fairlead, rope, pulley block, hook and motor.
- When winch is under load, do not approach or cross the rope.

- When using the winch to move the load, place the vehicles transmission in neutral and apply the brake of the vehicle and place wedges under each wheel. When the hoist is working, the vehicle engine should be operated to charge the battery. Never use the winch with insufficient voltage.
- Never disconnect the power supply when there is a load on the winch.
- After the operation, release the load immediately and do not tighten the rope.
- Always stay away from ropes, hooks and winches when in operation or under load.
- Check winches, ropes, hooks, and broken strands of worn rope regularly. When handling the rope, wear thick leather gloves. Do not let the rope slip over your hands. Check the rope before use.
- Crushed, pinched, worn or kinked areas seriously reduce the carrying capacity of the rope. Damaged rope should be replaced. It must be re-wound under a load of about 50 kg.
- The clutch should be disconnected first, and then the rope should be pulled by the hook of the protective lever. Do not pull the rope directly through the hook with your fingers.
- Maintain the specified tension so that the rope can be wound on the drum and re-rolled after the operation tight.
- Do not operate the winch if you are under the influence of alcohol or drugs. Be cautious during operation. If there is a problem, you should cut off the power immediately and check the battery.
- Wear goggles, long sleeves, non-slip boots, work caps, thick leather gloves. Place long hair tightly under a work cap and remove all personal jewelry.

- When the winch is in use, be sure to start the vehicle engine and set the gear to "N" position.
- When the winch is working, it will draw voltage, so you must start the vehicle and step on the accelerator lightly to avoid damage to the battery.
- If severe noise or vibration occurs during the use of the winch, stop the winch immediately.
- When the winch is not used, unplug the controller.

⚠ WARNING

When releasing or retrieving the winch rope, both ends of the rope must be left with sufficient length to prevent the rope from being over-rolled in or out. When the rope is retrieving, please maintain a certain tension so that the wire can be retracted smoothly and can be wound tightly during retrieving.

⚠ WARNING

Always use the hook strap to pull the hook. Do not hold the hook with your hands. This is not only important when winding the rope, but also when removing the rope from the winch under power.

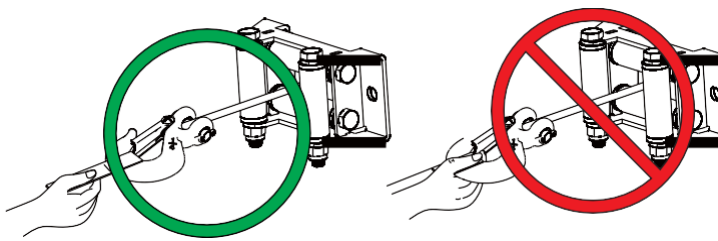

Winch Operation

Manual Release of the rope

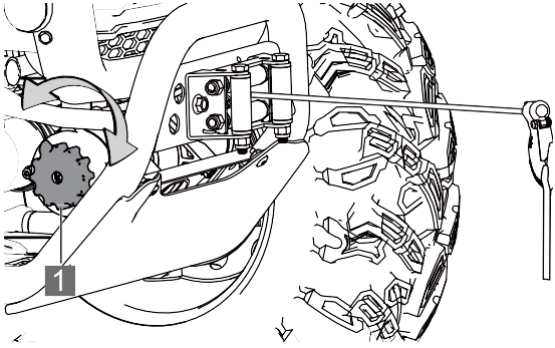

1 **Manual release switch**

- When you turn the winch manual release knob clockwise, the winch rope can be pulled out manually.
- When you turn the winch manual release knob counterclockwise, the winch will be controlled by Control switch.

Operation of Control Switch

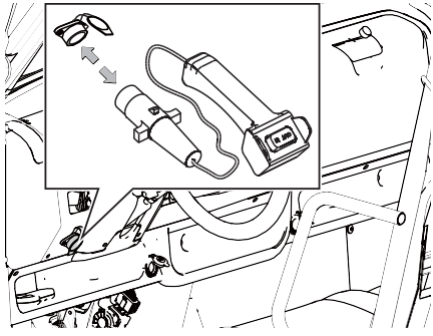

OUT: Release the rope **IN: Recoil the rope**

Remove the Remote control from the passenger´s armrest and connect it to the receptacle in the dash panel.

1. Open the waterproof cover of the receptacle.
2. Insert control switch connector into the receptacle.

Remote control

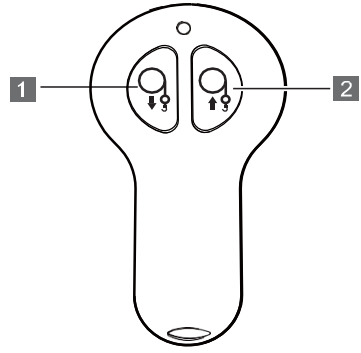

1 **Release the winch rope** 2 **Recoil the winch rope**

NOTICE
If the remote control doesn't work, it may happen that the battery in the remote control is flat. Replace the battery with a new one in such case.

When the winch is needed, the rope should be aligned with the vehicle, preferably in a straight line. Too sharp angle will change the direction of tension and damage the rope. In case of serious noise or vibration during the use of the winch, stop the winch immediately.

MAINTENANCE AND STORAGE

PERIODIC MAINTENANCE 95

LUBRICATING OIL 100

Front maintenance cover 101

Cargo Box 102

Lift cargo bed 103

ENGINE OIL 104

Oil Recommendation 105

Engine Oil Level Check 106

Replacing Engine Oil & Filter 108

Adding Engine Oil 109

FRONT/REAR GEARBOX OIL 110

Check the Rear Gear Box Oil Level 111

Front/Rear Gearbox Oil change 112

Adding gear oil 113

CVT belt 114

Drying the CVT 114

SPARK PLUG 115

Spark Plug Inspection 116

COOLANT 118

Coolant bottle 119

Radiator coolant 120

BRAKE SYSTEM 121

Brake Fluid 122

Brake Pads 123

MAINTENANCE AND STORAGE

TIRES 124
Tire Pressure 124
Tread Depth 124
When to replace a tire 125
Replacing the tires 125
Wheel Removal 126
Tire Sizes 127
SUSPENSION ADJUSTMENT 128
LUBRICATION 129
Front/Rear drive axle dust boots 130
AIR FILTER 131
Replacing air filter element 131
Replacing primary air filter 132
LIGHTS 134
Change the headlight 134
Replacing taillight/rear turn light 136
High beam adjustment 137
SPARK ARRESTOR 140
BATTERY 142
Battery Removal 143
Battery Charging 144
Battery Installation 144
Jump-starting the vehicle 144
FUSES 147
Fuse Box 148
Fuse / Relay ratings and location 149
Fuse Replacement 151

MAINTENANCE AND STORAGE

APPEARANCE AND CARE 152
Vehicle Washing.....152
Vehicle Storage.....152

PERIODIC MAINTENANCE

Periodic maintenance will help keep your vehicle in the safest, most reliable condition. Inspection, adjustment and lubrication of important components are explained in the periodic maintenance chart.

Inspect, clean, lubricate, adjust and replace parts as necessary. When you need replacement parts, use genuine Segway Powersports parts available from your authorized Segway Powersports dealer.

Service and adjustments are important for proper vehicle operation. If you're not familiar with the service and adjustment procedures, have a Segway Powersports dealer perform these operations.

Maintenance intervals in the following chart are based upon average riding conditions. Vehicles subjected to severe use and / or conditions must be inspected and serviced more frequently.

Severe use is defined as:

- **Frequent operation in mud, water, or sand**
- **Frequent or prolonged operation in dusty conditions**
- **Short rides in cold weather**
- **Racing or racing-style riding in high RPM**
- **Prolonged low speed, heavy load operation**
- **Extended idling**

Maintenance Chart Key

Symbol	Description
▶	Perform these procedures more often if the vehicle is subjected to severe use.
D	Have an authorized Segway Powersports dealer to perform these services.

⚠ WARNING

Improperly performing the procedures marked with a D could result in component failure and lead to serious injury or death. Have an authorized Segway Powersports dealer to perform these services.

Perform services at whichever interval is reached first (km / hours).

	ITEM	MAINTENANCE INTERVAL (WHICHEVER COMES FIRST)			REMARKS
		HOURS	WHEN	KM	
	Steering		Pre-Ride		Visually inspect, test, or check components. Make adjustments and/ or schedule repairs when required
	Front suspension		Pre-Ride		
	Rear suspension		Pre-Ride		
	Tires/ Wheels/ fasteners		Pre-Ride		
	Brake fluid level		Pre-Ride		
	Brake system		Pre-Ride		
	Accelerator		Pre-Ride		
	Engine oil level		Pre-Ride		
►	Air filter, primary air filter		Daily		Inspect; clean often; replace as needed
	Coolant		Daily		Check level
	Power steering EPS (if equipped)		Daily		Inspect daily; clean often
	Headlight/ taillight/ flashers		Daily		Check operation; apply dielectric grease if replacing bulbs
►	Air filter, main element		Weekly		Inspect; replace as needed

ITEM		MAINTENANCE INTERVAL (WHICHEVER COMES FIRST)			REMARKS
		HOURS	MONTHS	KM	
▶ D	Brake pad wear	10 H	Monthly	160	Inspect periodically
	Battery	20 H	Monthly	300	Check terminals; clean; test
	Fuel System	20 H	Monthly		Inspect; cycle key to pressurize fuel pump; check lines and fittings for leaks and abrasion
▶	Engine oil change	25 H	1 M	1000	Break-in oil and filter change
▶	Front gearcase oil	25 H	1 M	320	Break-in oil level check
▶	Rear gearcase oil	25 H	1 M	320	Break-in oil level check
▶	General lubrication	50 H	3 M	800	Lubricate all fittings, pivots, cables, etc.
	Throttle Body Intake Duct	50 H	6 M	800	Inspect duct for proper sealing/air leaks
	Drive belt	50 H	6 M	300	Inspect; adjust; replace as needed
	Cooling system	50 H	6 M	1000	Inspect coolant strength seasonally; pressure test system yearly
▶	Engine oil change	100 H	6 M	1000	Change the oil and filter
▶	Oil lines and fasteners	100 H	6 M	1000	Inspect for leaks and loose fittings
▶	Front gearcase oil	100 H	12 M	1000	Change fluid;
▶	Rear gearcase oil	100 H	12 M	1000	Change fluid
D	Fuel system/filter	100 H	12 M	1000	Cycle key to pressurize fuel pump; check for leaks at fill cap, fuel lines/rail and fuel pump; replace lines every two years

ITEM		MAINTENANCE INTERVAL (WHICHEVER COMES FIRST)			REMARKS
		HOURS	MONTHS	KM	
►	Radiator (if applicable)	100 H	12 M	1000	Inspect; clean external surfaces
►	Cooling hoses (if applicable)	100 H	12 M	1000	Inspect for leaks
►	Engine mounts	100 H	12 M	1000	Inspect
	Exhaust muffler/ pipe / Joints	100 H	12 M	1000	Inspect; clean; replace worn parts
D	Spark plug	100 H	12 M	1000	Inspect; replace as needed
D	Clutches (drive and driven)	100 H	12 M	1000	Inspect; clean; replace worn parts
D	Front wheel bearings	100 H	12 M	1000	Inspect; replace as needed
D	Brake fluid	200 H	24 M	1000	Change every two years
	Spark arrestor	300 H	36 M	2000	Clean out
►	Coolant		60 M		Replace coolant
D	Valve clearance	500 H		5000	Inspect; adjust
	Idle speed				Adjust as needed
D	Toe adjustment				Inspect periodically; adjust when parts are replaced
	Headlight aim				Adjust as needed

LUBRICATING OIL

Check and lubricate all components at the intervals listed in the periodic maintenance chart. Items not listed in the chart should be lubricated in the general lubrication interval. The rocker arm is lubricated at the factory and does not require additional lubrication. However, if these components are heavily used, the user may perform additional lubrication as required.

Item	Recommended fluid	Capacity	Inspection procedure
Engine oil	SAE10W-40/SL or higher grade	3200 ml	Maintain level in safe range on dipstick
Front differential	SAE 75/80W-90 GL5	180 ml (When there is no oil stains after internal cleaning) 160 ml (Only when changing gear oil)	Drive each 2000 km
Rear differential	SAE 75/80W-90 GL5	1500 ml	
Coolant		7500 ml	Maintain the level between the fill lines.
Brake fluid	DOT4/DOT 3		Maintain the level between the fill lines.
Suspension, stabilizer bar grease		——	Grease nozzle (2 pumps max) every 800 km.

Front maintenance cover

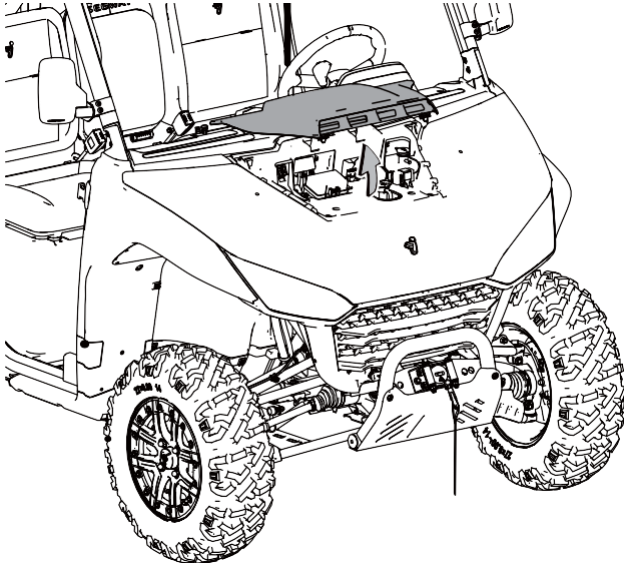

Hold the front maintenance cover and lift it upward. Open the cover. Fuse box and coolant filling port are located under the cover.

Cargo Box

WARNING

Do not carry passengers on cargo box. When loading the cargo, do not exceed the maximum allowed capacity of the cargo box.

Cargo box tailgate

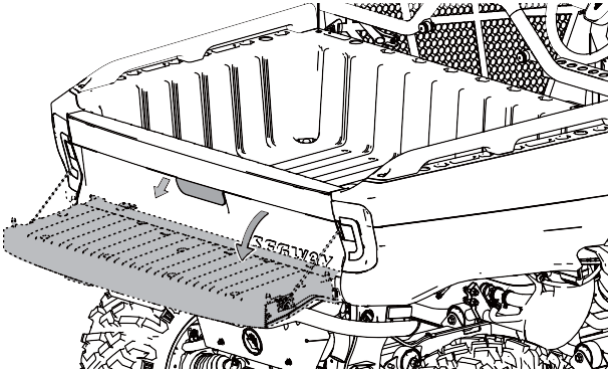

To open:
Open the tailgate by lifting the handle of the rear door panel.

To close:
Raise the tailgate up and push it hard. When you hear the "click" of the tailgate lock, the tailgate is closed. After closing, check whether the tailgate is locked.

Lift cargo bed

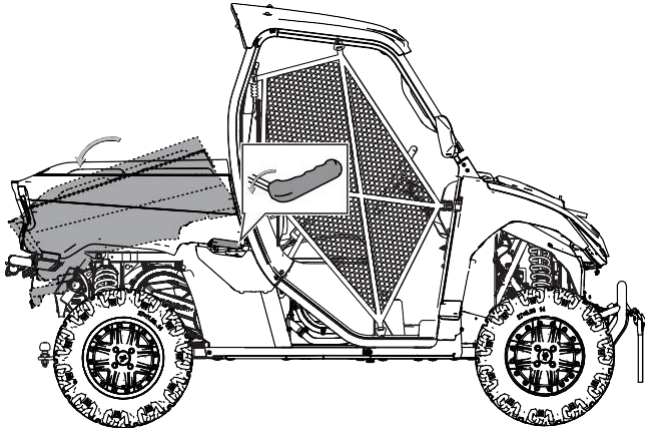

Cargo bed release handles are on the left and right sides of the vehicle.

Lift the release handle up to raise the cargo bed. The lock hook of the cargo box will spring open. The cargo box will slowly tilt upwards , and stop automatically when it reaches the limit. Push down from the front of the cargo box to lower and secure the latch.

⚠ CAUTION

Before lifting the cargo box for unloading, open the tailgate first.

ENGINE OIL

Be sure to check and change the engine oil at the intervals specified in the maintenance chart. Be sure to use the recommended engine oil. The oil filter must be changed every time when the oil is changed. Pay attention to the oil level. An increase in the oil level during cold weather operation can indicate contaminants collected in the oil sump or crankcase. If the oil level starts to rise, change the oil immediately. Monitor the oil level: if it continues to rise, stop using the vehicle and determine the cause. Your Segway Powersports dealer can assist.

WARNING

Vehicle operation with insufficient, degraded or contaminated engine oil will cause accelerated wear and may result in engine failure, accident and / or injury. Always perform all maintenance procedures listed in the periodic maintenance chart.

Oil Recommendation

The oil filter must be changed every time when the oil is changed.

It is recommended to use 10W/50-SL four-stroke oil or similar oil for this engine. Follow the manufacturer's recommendations for ambient temperature operation. Refer to the lubricant guide section for oil recommendations and capacity.

Recommended engine oil: MAXIMA PRO PLUS+ 10W-50, API SL

! ▲CAUTION
Mixing brands or using non-recommended oils may cause engine damage.

Engine Oil Level Check

NOTICE
Running the engine with an improper oil level can cause serious engine damage.

1. Start the vehicle and let the engine idle for 5 minute, stand for 30 seconds.
2. Using a rag hold the end of the oil dipstick, and remove the oil dipstick from the engine.
3. Wipe the oil from the dipstick.
4. Screw in the dipstick completely.
5. Pull the dipstick out and check the oil level.

Check the oil level as shown in figure below. If the oil is between the upper and lower marks, it is the proper oil level. Below the lower mark means oil is too low, above the upper mark means the oil is too much. Too low or too much oil in the engine is not recommended.

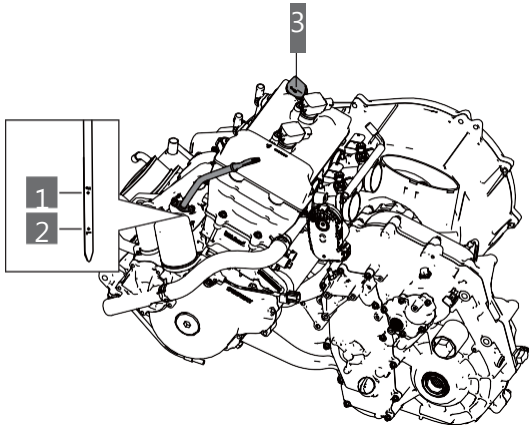

1 **Upper mark** 2 **Lower mark** 3 **Oil Filler cap**

4. After cleaning the oil dipstick, insert and install it again.
5. If the oil level is near or below the lower level:
   - Flip the cargo box (see page 103).
   - Remove the oil fill cap 3 from the front right crankcase cover.
   - Add the specified oil into the fill cap hole, up to the upper mark on the dipstick.
   - Reinstall the oil fill cap and dipstick.

Replacing Engine Oil & Filter

Have your engine oil changed by an authorized Segway Powersports dealer. As part of the change, the service will also change the oil filter and clean the oil strainer.

NOTICE

Whenever changing engine oil, change also the oil filter.

Recommended engine oil: MAXIMA PRO PLUS+ 10W-50, API SL

WARNING

Used engine oil contains potentially hazardous pollutants, which can cause causes skin diseases such as dermatitis and skin cancer. Care should be taken to avoid prolonged and repeated exposure to such oils. Wash the skin thoroughly with soap and water to remove used engine oil.

Used oil and oil filter must be disposed in a safe and compliant way with environmental regulations. Do not dispose used oil and filters in domestic garbage, sewers or on the ground. For information on oil recycling or scrapping, please consult your Segway Powersports dealer.

Do not put used oils in a place where children could reach them.

Adding Engine Oil

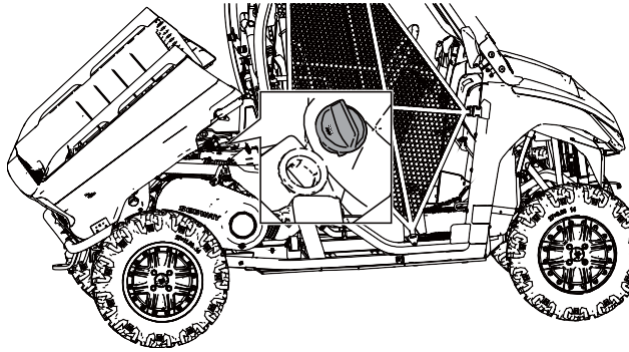

Recommended engine oil: MAXIMA PRO PLUS+ 10W-50, API SL

Lift the cargo box (page 103), and locate engine oil cap.

1. Unscrew the oil cap.
2. Add an appropriate amount of the recommended oil type. Be careful to not overfill. The correct oil level is between the upper and lower level marks on the dipstick.
3. Tighten the oil cap.
4. Put the gear into "Park".
5. Engage the parking brake.
6. Start the engine and let it idle for 1-2 minutes.
7. Stop the engine.
8. Check for the leaks.
9. Check the oil level and add oil as needed to make the oil level reach the upper mark on the dipstick.
10. Properly dispose of used filters and oils.

FRONT/REAR DIFFERENTIAL/GEARBOX OIL

Check and let replace the front and rear differential / gearbox oil at intervals specified in Periodic maintenance chart. Replace front gearbox oil every 25 hours if the 4WD unit is exposed to the extreme use.

Extreme use includes any of the following:

- Continuous 4WD operation in mountains
- Riding in mountain areas for long periods of time in 4WD
- 4WD is the primary mode of all-wheel drive operations

NOTICE
If the front gearbox makes too much noise during 4WD operation, change the gearbox oil. If the noise continues, visit your Segway Powersports dealer.

Use only the recommended oil type. Using other oil may result in improper operation or gearbox malfunction. Maintain oil level up to the bottom of filling hole thread.

Recommended front differential oil:
SAE 75W-90 GL-5 (**Maxima SAE 75W-90 GL-5**)

Recommended rear differential oil:
SAE 75W-90 GL-5 (**Maxima SAE 75W-90 GL-5**)

Recommended rear gearbox oil:
SAE 80W-90 GL-5 (**Maxima SAE 80W-90 GL-5**)

Check the Rear Gearbox Oil Level

1. Park the vehicle on the level ground. Put the vehicle to a stop.
2. With a rag, remove and pull out the oil dipstick.
3. Clean the dipstick.
4. Re-insert the dipstick completely.
5. Check the oil level as shown in the figure above. The oil should be between the marks. Add oil if the oil level is low.
6. Wipe the dipstick before reinstalling.

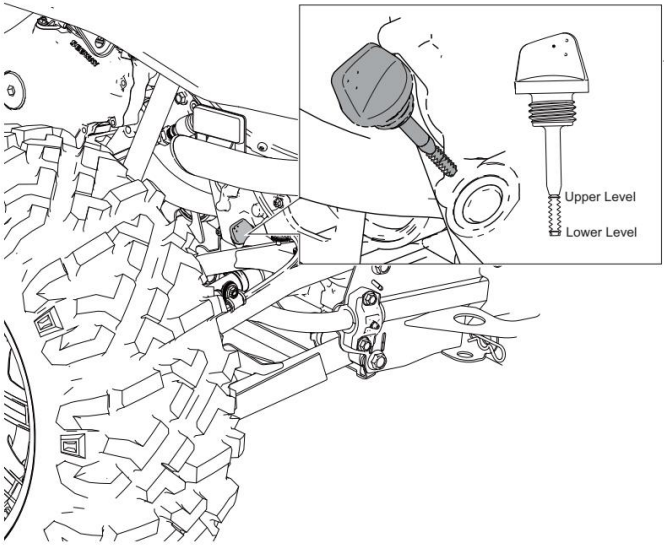

Front/Rear Gearbox Oil change

Have your Front/Rear differential / Rear gearbox oil changed by an authorized Segway Powersports dealer.

Recommended front differential oil:
SAE 75W-90 GL-5 (Maxima SAE 75W-90 GL-5)

Recommended rear differential oil:
SAE 75W-90 GL-5 (Maxima SAE 75W-90 GL-5)

Recommended rear gearbox oil:
SAE 80W-90 GL-5 (Maxima SAE 80W-90 GL-5)

Adding gear oil

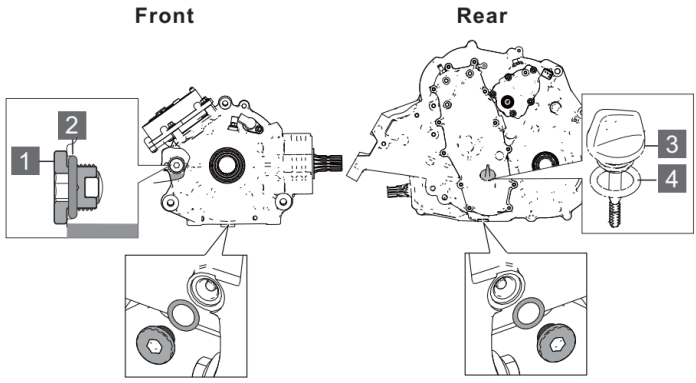

1 **Filling Plug** 2 **O-ring** 3 **Oil Dipstick** 4 **O-ring**

Torque	Filling Plug: 16-20 Nm

1. Place the vehicle on a level ground
2. Remove fill plug
3. Add the recommended amount of oil
4. Reinstall the fill plug and torque it to specifications
5. Check for any leakage

CVT Belt

Replace the CVT drive belt in intervals specified in the maintenance schedule. If the belt is damaged, have it changed by an authorized Segway Powersports service. When replacing the belt, clean the CVT housing pipe, clutch and engine compartment for debris.

WARNING

Failure to remove all debris when the belt is replaced can result in vehicle damage, loss of control and serious injury or death.

Drying the CVT system

In some cases, the water may ingest into the CVT system and must be dried out it before operating.

1. Remove the CVT drain plug.
2. Wait for the water to drain and reinstall the drain plug.
2. Start the engine.
3. Increase the engine speed and maintain it for 10-15 seconds to remove the excess moisture and to dry the belt and CVT. DO NOT fully open the throttle during this operation.
4. Shift gears to the low range and test for belt slippage.
5. If the belt still slips, repeat the process.
6. Visit your Segway Powersports dealer if your vehicle needs service.

SPARK PLUG

Refer to the specifications below for the recommended spark plug type and gap.

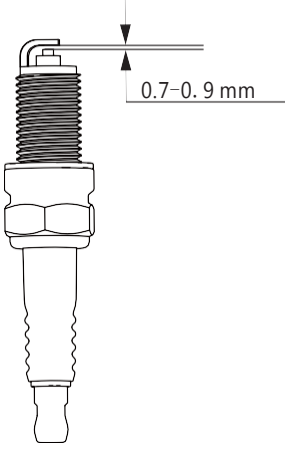

⚠ CAUTION

Using other than recommended spark plug can cause serious engine damage. Always use the recommended spark plugs or their equivalents.

Spark Plug	
Type	NGK CPR7EA
Spark plug gap	0.7-0.9 mm
Tightening torque	11 Nm

Spark Plug Inspection

The spark plug condition indicates how the engine is running. Check or change the spark plugs in intervals specified in Periodic maintenance schedule.

CAUTION

Allow the engine to cool down before removing the spark plug for inspection. Hot exhaust system and hot engine will cause burns.

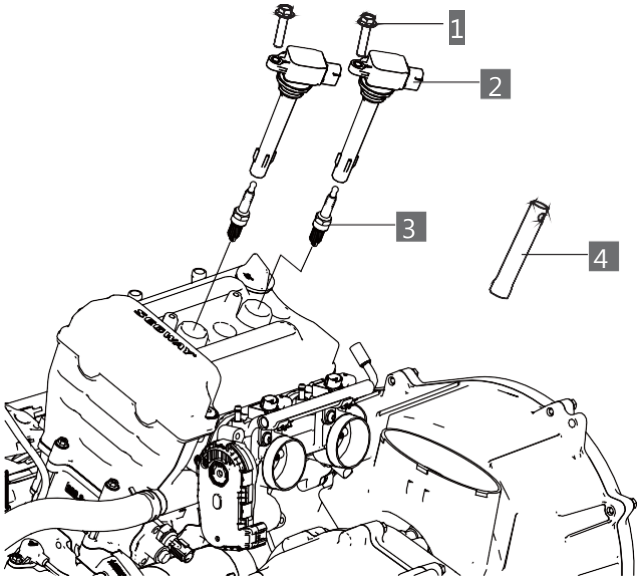

1 **Bolt**

2 **Ignition coil**

3 **Spark plug**

4 **Spark plug**

Spark plug is located under the cargo box. Refer to page 103 how to open the cargo box. When replacing the spark plugs, replace both spark plugs at the same time.

1. Remove the ignition coil fixing bolts.
2. Take out the ignition coil. Spark plug is located below the ignition coil.
3. Using the spark plug wrench provided in the tool kit, remove the plugs by rotating them counterclockwise.
4. Reverse the procedure for spark plug installation. Torque to specification.

Normal spark plug: the insulator is grayish-white, grayish-yellow or light-brown, and the electrode gap is about 0.7-0.9 mm.

If the spark plug shows electrode wear, carbon deposits or gap is too large, replace the spark plugs.

COOLANT

Coolant circulates in the engine cooling system, taking away the excess heat generated during the engine operation and making the engine operate at normal operating temperature. Maintaining the coolant will allow the cooling system to work properly and prevent freezing, overheating, and corrosion. Therefore, the coolant should be frequently checked. The factory recommends using a 50/50 mix of antifreeze and water in this vehicle. This ratio is recommended for most operating temperatures and provides good corrosion protection.

Recommended coolant:

Coolant	**Maxima COOLANOL** (ready-to-use 50/50 blend)

Coolant bottle

Coolant bottle is located under the front maintenance cover.

1. Check the coolant level in the coolant bottle in the left side of front maintenance panel.
2. If the liquid level is low, add recommended type of the coolant. Coolant should be in the bottle between minimum MIN and maximum MAX marks (as the liquid cools).

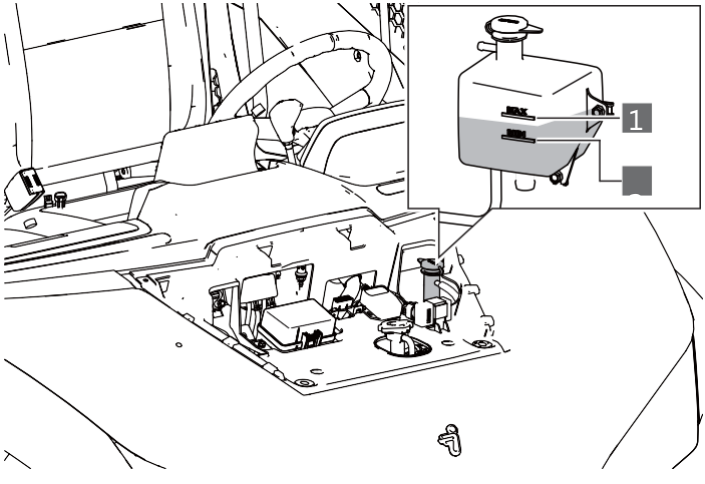

1 **MAX** 2 **MIN**

3. Open the cap and pour in the new coolant. Pay attention to the coolant level when pouring. Do not exceed the maximum level.
4. Reinstall the cap.
5. Close the front maintenance cover.

Radiator coolant

To ensure that the coolant maintains its ability to protect the engine, we recommend the system each five (5) years completely drained and new antifreeze 50/50 premix added.

⚠ CAUTION

Escaping steam can cause burns. Do not release the radiator pressure cap when engine is hot. The engine must cool down before the pressure cap can be removed.

Use fresh antifreeze whenever cooling system fluid has been drained for maintenance or repair. Use 50/50 premix to replace coolant. If the coolant bottle has dried up, check the liquid level in the radiator. Add coolant when needed.

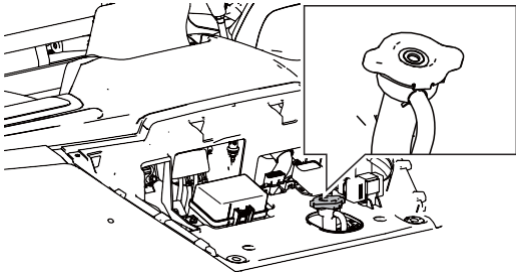

1. Remove front maintenance cover.
2. Remove the pressure cap.
3. Using funnel slowly add coolant through the radiator filling port.
4. Reinstall the pressure cap. Use of non-standard pressure caps will affect the normal operation of the recovery system.

Your dealer can provide the correct replacement parts.

BRAKE SYSTEM

The front and rear brakes are hydraulic disc brakes that are activated by pressing the brake pedal with your foot. These brakes are self-adjusting. As the brake pads wear, the brake fluid level will drop. Leakage in the system will also cause the fluid level to drop.

⚠ WARNING

Brake fluid levels must be checked periodically.

Overfilling the brake cylinder may cause brake drag or brake lock-up, which may result in serious injury or death.

Keep the brake fluid at the recommended level and do not overfill.

Check brake pads and brake disc wear regularly.

The following inspection is recommended to keep the braking system in good working condition. If the brake is in heavy use during normal operation, check it frequently.

1. Always keep the brake fluid at an appropriate level. Refer to master cylinder/brake fluid section for details (p. 127).
2. Check the brake system for leakage.
3. Check whether the brake pedal has too long travel or feels soft.
4. Check whether the friction gasket is worn, damaged or loose. When replacing the brake gasket, the brake pad must be replaced when the remaining limit thickness of the brake pad is not less than 1 mm.
5. Check the safety and surface condition of the disc. Use the recommended brake cleaner to clean any grease. Do not use spray lubricants or other petroleum-based products. If any damage (crack, excessive corrosion, warping) is found, check the Segway Powersports service before further operation.

Brake Fluid

Use the recommended brake fluid:

Brake Fluid	DOT4

No adjustment is required for the hydraulic braking system. Check the brake fluid level frequently. If brake fluid level is low, perform following operations.

1. Brake fluid container is located behind the left front wheel.
2. Observe the liquid level in the container:

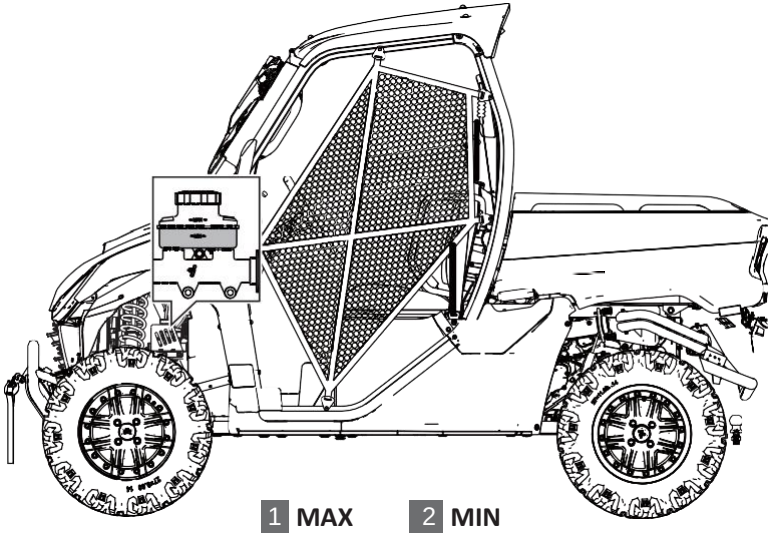

3. Brake fluid level must be between the MAX and MIN marks. If brake fluid level is lower than the MIN mark, add recommended brake fluid and check the fluid level.
4. Check whether the brake pads are worn.

NOTICE

Brake fluid can damage plastic and painted surfaces and should be handled with caution.

If the brake fluid comes into contact with your skin or eyes, flush with plenty of water immediately. If you feel sick, seek medical attention immediately.

Brake Pads

Brake pad wear depends on the severity of the operator and operating conditions. Brake components will wear faster in wet and muddy conditions. Periodically inspect the brake components for wear according to the Periodic maintenance table. If the brake pad thickness is less than, or equal to 1.0 mm (minimum thickness), replace all brake pads.

Brake pads thickness	**Standard thickness**	**5.0 mm**
	Minimum thickness	**1.0 mm**

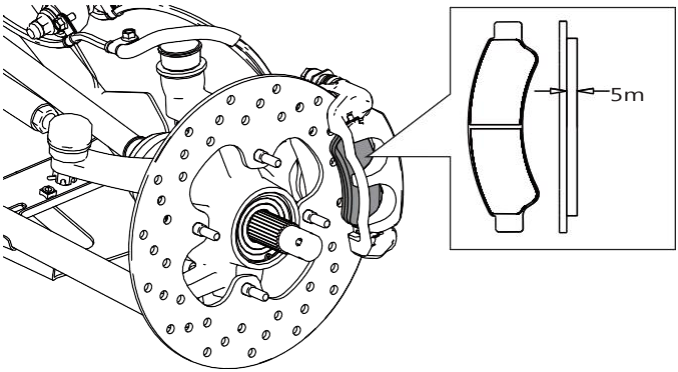

TIRES

Tire Pressure

Driving a vehicle with the incorrect tire pressure may result in the following consequences:

- Reduced fuel efficiency
- Reduced driving comfort and shortened tire life
- Reduced driving safety

When checking tire pressure, use the following pressures:

Recommended Tire Pressure	Front	Rear
	103 kPa	110 kPa

- Allow the tire cools down before checking pressure.
- If the vehicle has been parked for at least 3 hours, or has not driven more than 1.5 km, the check at this time can get an accurate reading of the cold tire inflation pressure.
- Tire appearance can sometimes be misleading. Even a few pounds less air in a tire can affect driving and handling performance.
- Increasing of tire pressure is normal after the ride; do not reduce the tire pressure after driving.

Tread Depth

Inspection method 1:

- Observe the tire wall to find the Tire Wear Indicator (TWI) or follow the triangle sign "△" to see limit. When the tread reaches the indicator, it's time to replace the tire(s).

Inspection method 2:

Check the wear condition of tire tread block. When the wear condition of tire tread block is at least 1.6 mm higher than tread, replace the tire.

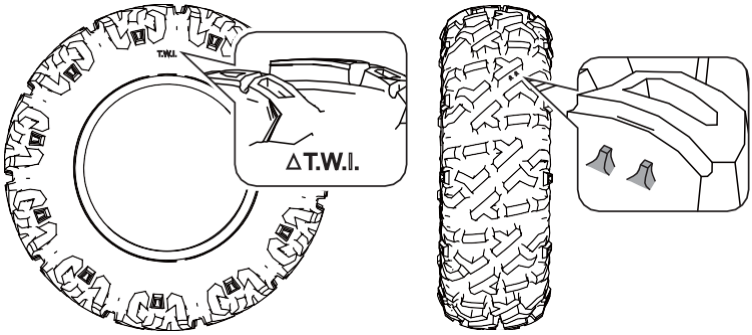

When to replace a tire:

- if the tire is damaged (cut, delamination, or a deep crack of the sidewall), or there is a bulge indicating that the tire is damaged.
- if tires has air leaks and cannot be normally repaired due to the size or position of the area of the leak. If you are not sure, consult your Segway Powersports dealer.

Replacing the tires

When the tire tread wear has reached the indicator mark, or the tire is damaged due to impact, the tire should be replaced.

Wheel Removal

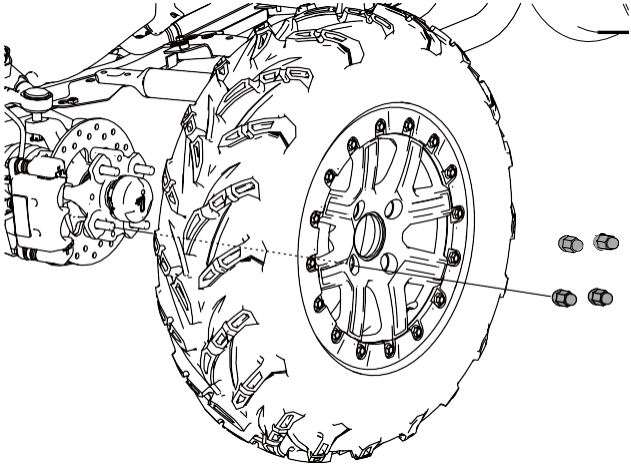

Torque to specifications:

Torque	Wheel Nuts: 100-120 Nm

1. Stop the engine.
2. Put the gear shifter in "P" position.
3. Lock the parking brake.
4. Partially loosen wheel nuts.
5. Lift the side of the vehicle by placing a suitable jack under the frame.
6. Loosen the wheel nuts completely.
7. Remove the wheel.

⚠ CAUTION

Loose wheel nut may cause the wheel to fall off during ride, which may cause an accident or rollover. Always ensure that all wheel nuts are tightened to the required torque (100-120 Nm). Do not use lubricating oil or grease on wheel bolts / nuts. Lubricating oil or grease may cause excessive tightening of wheel nuts, resulting in damage to bolts or wheels. In addition, lubricating oil or grease can cause wheel nuts to become loose and wheels may fall off, which will lead to accident and serious injury. Remove any lubricating oil or grease from wheel bolts or wheel nuts.

Tire Size

⚠ WARNING

Do not use tires / wheels of different sizes than recommended in this manual as this can cause the vehicle to lose control.

	Front	Rear
Recommended tires	27×9.00-14	27×11.00-14
	27×9.00R14	27×11.00R14

SUSPENSION ADJUSTMENT

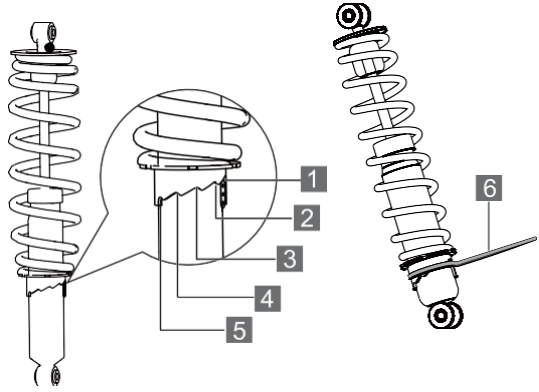

The springs have 5 adjustment positions. The springs can be adjusted according to terrain and loading conditions. If you feel suspension is too soft and too hard, adjust the spring preload according following table:

Position 1 :
Standard position

Position 2 - 5:
When the load is heavy, spring can be adjusted to this position.

Position	Spring	Surface	Load	Terrain	Speed
1	Soft	Soft	Light	Flat	Low
2	↑	↑	↑	↑	↑
3					
4	↓	↓	↓	↓	↓
5	Hard	Hard	Heavy	Bumpy	High

Use spanner hook wrench 6 to adjust the spring preload.

⚠ CAUTION

When adjusting the springs, always adjust the left and right side to the same positions; Step up or down one position only at a time during adjustment. Do not try to make excessive adjustments which can damage the shock absorber.

LUBRICATION

Front suspension, rear suspension, drive shafts and stabilizer bars are fitted with grease fittings. If you see the label below, there is a grease spot nearby.

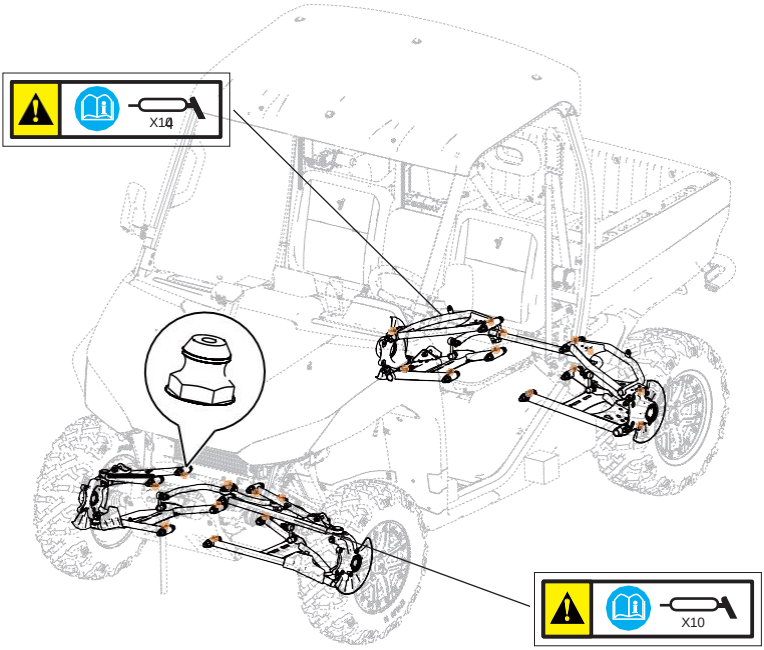

These parts need sufficient lubrication. Lubrication can reduce the wear of these parts and increase the service life of the vehicle. Follow the periodic maintenance table to add appropriate grease at prescribed intervals.

Front/Rear Drive Axle Dust Boots

Check for cuts, damage or grease leakage in the front and rear drive axle dust boots. If you find a damage or grease leakage, contact your Segway Powersports dealer for replacement.

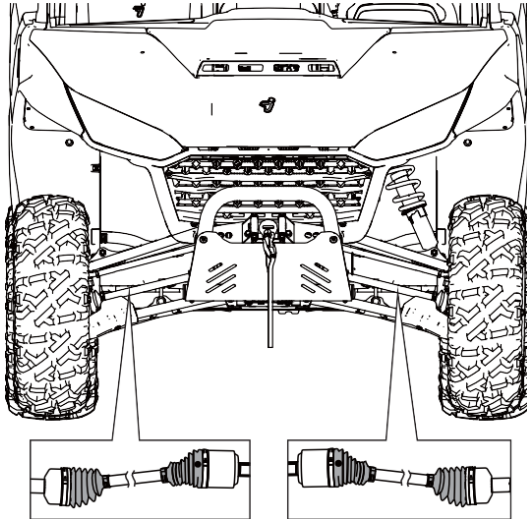

AIR FILTER

This vehicle utilizes a two-stage air filtration system. The air passes through the primary filter screen first and then through the main air filter. This two-stage filtration fully meets the needs of the engine.

The air filter element should be replaced regularly according to the periodic maintenance table. The primary filter screen must be cleaned often.

Replacing Air Filter element

The air filter element needs to be changed after using for a period of time, as shown in the specific cycle

Maintenance intervals (page 97-99).

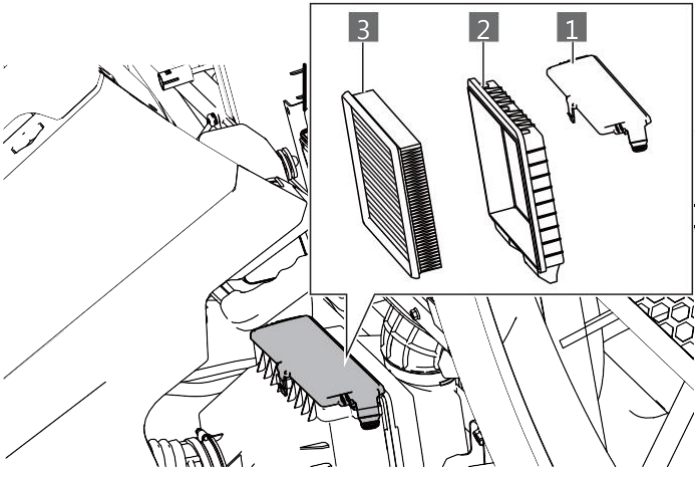

1 **Air filter cover** 2 **Air filter holder** 3 **Air filter element**

The air filter is located under the cargo box. Flip the cargo box up to open.

1. Press the plastic buckle on the air filter cover and pull out the air filter cover 1
2. Pull out the air filter with holder.
3. Take the air filter element 3 out from the box; clean or replace the filter element according to the condition of the filter element.
4. Reinstall the filter element to the filter.
5. Reinstall the air filter cover.

Replacing Primary Air Filter Screen

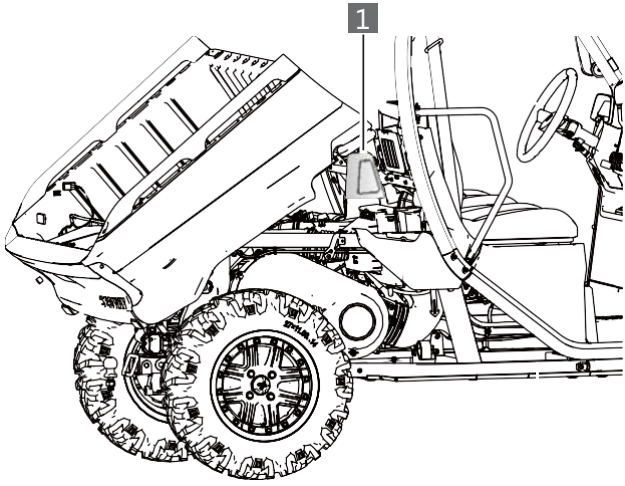

1 **Primary air filter screen**

Primary filter screen must be cleaned every time after riding in dusty conditions. If primary filter screen is damaged, replace it.

WARNING

When assembling the air filter element, make sure that the buckles of the filter element and the cover are in place; otherwise it will cause the engine to malfunction or reduce service life.

When the vehicle is operated in a dusty environment, please shorten the time interval for checking the filter element.

The air filter is soaked or the filter element is wet, please drain the water and replace the filter element.

LIGHTS

CAUTION

Poor lighting can result in reduced visibility when driving. Clean the headlamps frequently and replace non-working headlamps promptly.

To ensure optimum visibility and safety, make sure the lights are properly adjusted.

Change the headlight

LED lights

LED lights consist of multiple lights. If any LED segment burns out, let the dealer replace the whole light as a piece.

Halogen lamp

If the halogen bulb is burnt, it can be replaced. You can replace the following lamps yourself. The ease of replacement varies according to the bulb types. Due to possible damage, we recommend that the bulbs are better to be replaced by the dealer.

In the following cases, contact your dealer for more information:

- There are big beads of water inside the lens.
- Condensation of water inside the headlamp.

It doesn't mean malfunction if condensed water appears inside the headlamp lens temporarily.

⚠ CAUTION

Hot surfaces can cause skin burns. Allow the lights to cool before performing maintenance.

DO NOT touch the headlight bulb glass. Fingerprints on the glass can cause poor bulb performance or premature failure.

To replace the headlamp bulb:

1. Remove the headlamp cover expansion screw and remove the headlamp cover with the tool.

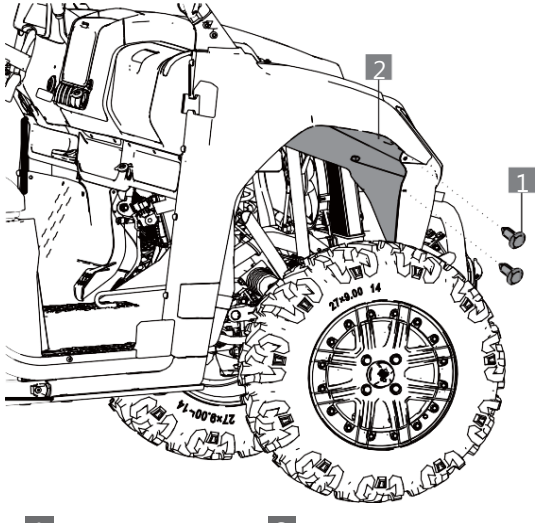

1 **Expansion screw** 2 **Headlight cover**

2. Twist clockwise and turn the cover off the headlamp.
3. Remove wire harness connector on the light and take out the broken bulb.

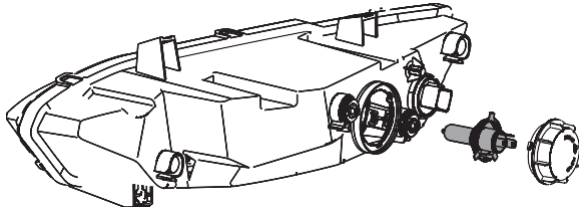

4. Install the new bulb and turn the headlights on.
5. Check whether headlight is working properly.
6. Press the fixed spring on both sides to make the spring pop out of the slot.

⚠ CAUTION
Replace lamp with the recommended power only.

Reinstall the new bulb into the new headlight assembly. The installation procedure is opposite to the disassembly. After installation, turn on the headlights to check whether the light is working properly.

Replacing taillight/rear turn light

How to change the taillights:

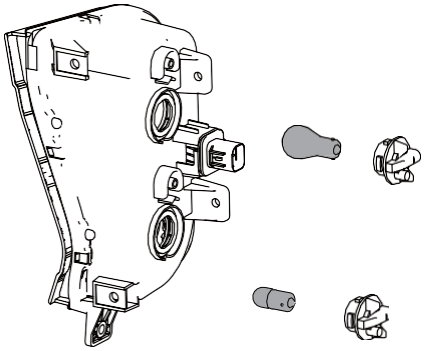

1. Remove rear light cover.
2. Unscrew the rear light holder.
3. Turn the bulb to be replaced from left to right. When the bead at the end of the bulb gets stuck in the limit slot of the bulb seat, the damaged bulb can be taken out and replaced with a new bulb of the same specifications.
4. Test whether the light works normally.

High beam adjustment

Headlight beam can be adjusted up and down. Use the following procedure to adjust.

⚠ CAUTION

Following pictures are for reference only. Your model may slightly differ. It is best to let the Segway dealer to adjust high beam.

1. Place the vehicle on a level surface with the headlights approximately 10m from a wall.

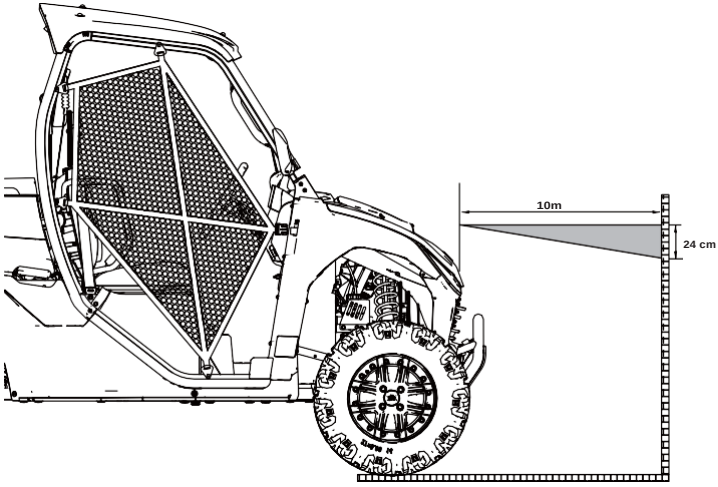

2. Measure the distance from the floor to the center of the headlights and make a mark on the wall at the same height.
3. Apply the brakes. Start the engine. Turn the headlights on.
4. Observe the headlight aim. The most intense part of the headlight beam should be aimed 24 cm below the mark on the wall. Include the weight of a rider on the seat when adjusting headlights.
5. If a headlight needs to be adjusted, locate the adjustment screw at the back of the headlight (see page 139).

Adjusting the headlight beam up and down

To raise the headlight beam, turn the headlight adjusting screw counterclockwise.

To lower the headlight beam, turn the headlight speed adjustment screw clockwise.

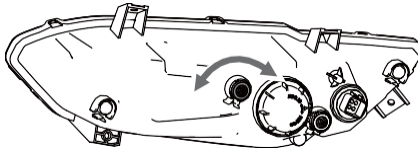

Adjusting the headlight beam left and right

The headlight beam can be adjusted from left or right.

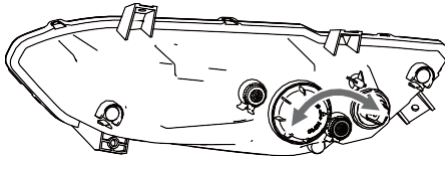

To turn the headlight beam to the left, turn the headlight adjustment screw counterclockwise.

To turn the headlight beam to the right, turn the headlight speed adjustment screw clockwise.

SPARK ARRESTOR

Spark arrestor prevents random sparks from entering other parts of the vehicle. Regular maintenance can prevent carbon accumulation, lack of maintenance will reduce engine performance.

⚠ WARNING

Make sure the exhaust has cooled down.

Ensure that there are no flammable materials in the area where maintaining the vehicle.

Safety glasses are recommended for this procedure.

Exhaust pipe must be cleaned periodically from accumulated carbon deposits:

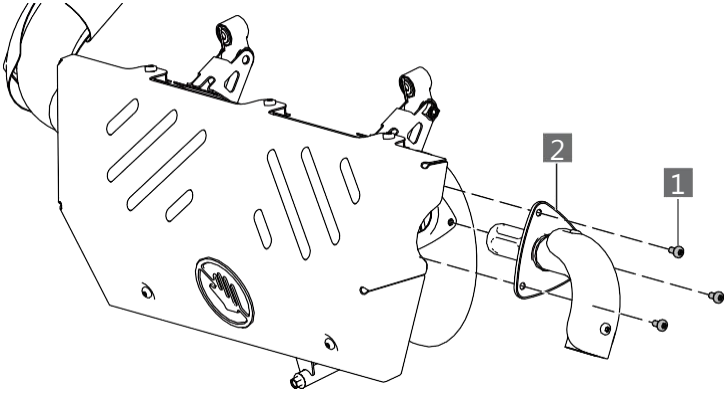

1 **Pan head screw M6×16** 2 **Spark arrestor**

1. Remove 3 fastening bolts 1 on the spark arrestor 2.
2. Remove the muffler spark arrestor.
3. Use a non-synthetic brush to clean the arrestor screen. A synthetic brush may melt if components are warm. If necessary, blow debris from the screen with compressed air.
4. Inspect the spark arrestor screen for wear and damage. Replace worn or damaged screen.
5. Reinstall the spark arrestor and fasten the screws.

BATTERY

Due to natural discharge and due to leakage effects of some electrical equipment, the battery will discharge gradually even when the vehicle is not in use. If the vehicle is parked for a long time, the battery may discharge and engine may not start. Charge the battery one time in a month if not in use. This will maintain the battery life.

WARNING

Lead batteries contain toxic and corrosive sulfuric acid and may produce flammable explosive hydrogen gas. To reduce the risk of serious injury or death, the following precautions should be observed when handling lead batteries or working near them:

- **Do not smoke or light a matches near battery.**
- **Avoid splashing electrolyte on eyes, skin and clothes.**
- **Wear safety goggles when working near battery.**
- **Keep children away from batteries.**
- **Be sure to charge the battery in an open area. Do not charge a battery in a poorly ventilated garage or enclosed room.**

Battery Removal

The battery is located under the passenger seat. If you want to replace or maintain the battery, remove the passenger seat and cover (see page 41 for details).

Turn the power off before removing the battery.

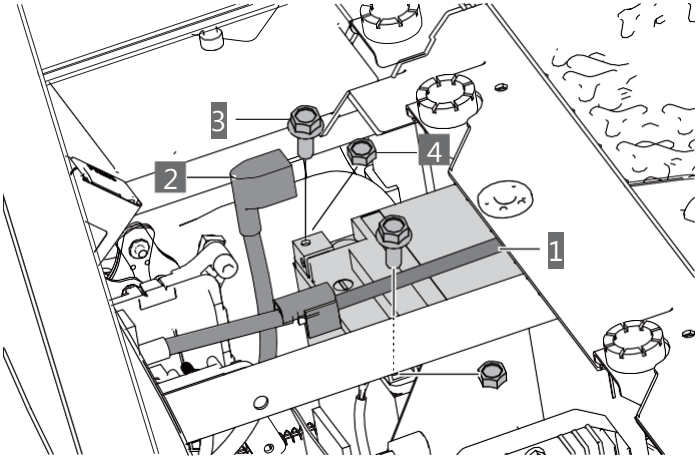

1 **Battery pull strap**

2 **Protective rubber sleeve**

3 **Positive and negative cable bolts**

4 **Positive and negative cable nuts**

1. Remove the two battery pull straps
2. Turn up the protective rubber sleeve.
3. Remove the battery negative terminal screw and disconnect the black (negative) battery cable.
4. Remove the battery positive terminal screw and disconnect the red (positive) battery cable.
5. Remove the battery.

Battery Charging

NOTICE

When charging, batteries produce hydrogen, extremely explosive gas. Please follow the following precautions when charging:

If charging the battery installed in the vehicle, be sure to disconnect the ground (negative) cable.

Make sure the power switch on the charger is off when connecting and disconnecting the charger to the battery.

Only charge slowly (5A or less), otherwise the battery may explode.

Using a charger that is not designed to charge maintenance-free batteries may destroy or irreparably damage your battery. We recommend using a Shark CN-4000 Smart Automatic Charger to charge your battery.

Jump-starting the vehicle

1. Connect the clamp of the positive jumper cable to the special jumper starting terminal of the vehicle.
2. Connect the clamp on the other end of the positive cable to the positive (+) terminal of another vehicle.
3. Connect the negative cable clamp to the negative battery terminal of another vehicle.
4. Connect the clamp on the other end of the negative cable to a separate clamp as shown.

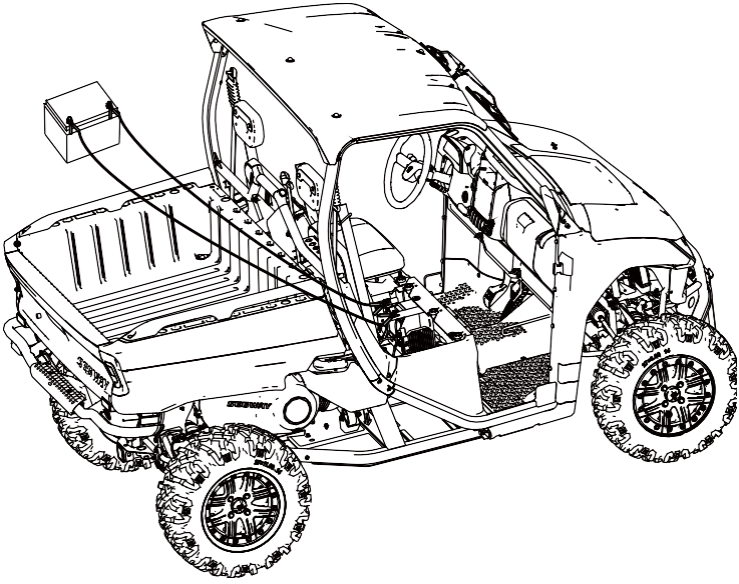

Battery Installation

NOTICE
To reduce the chance of sparks, disconnect the black (negative) cable first. When reinstalling the battery back to the vehicle, install the black (negative) cable last.

1. Clean battery terminals with a soft wire brush and contact cleaner, such as the Maxima Electrical Contact / Brake Cleaner. Finally, coat the terminals and bolts with electrical contact grease.
2. Put the battery in the tray.
3. Connect and tighten the red (positive) cable.
4. Connect and tighten the black (negative) cable.
5. Install a clear battery vent from the vehicle to the battery vent. (For conventional batteries only).
6. Install the battery press plate.
7. Tighten the battery clamp bolt.
8. Verify that cables are properly wired.

FUSES

All circuits on this vehicle have fuses to protect electrical equipment from damage caused by high current (short circuit or overload).

If any of the electrical parts do not work, the fuse may have blown. If this happens, check and replace the fuse if necessary. You can consider electrical faults, first check whether the fuse needs to be replaced, if it is found to have blown, replace the blown fuse. There is a spare fuse in the fuse box. Check all fuses for other possible causes. Replace all blown fuses and check the working condition of components. All fuses are placed in the fuse box. In the event of electrical system failure see "Fuse/Relay ratings and location" chapter for details.

NOTICE

- **Do not use a fuse above the rated value and do not replace it with anything else.**
- **Never use wires for fuses, not even as temporary replacement.**
- **Do not modify fuses or fuse boxes.**

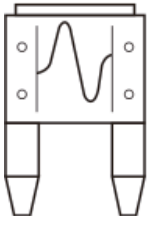

Normal fuse

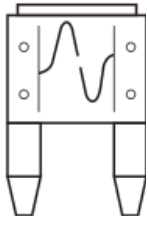

Blown fuse

Fuse Box

The fuse box is located under the front maintenance cover.
Removing the front maintenance cover - see page 101.

When the front maintenance cover is removed, fuse box is located at the bottom. Move the clasp on the left and right sides of the fuse box cover. Loosen the clasp and open the fuse box.

NOTICE
When installing the fuse box cover, pay attention to the orientation of the cover and locking tabs. **The label may be slightly different from the image below.**

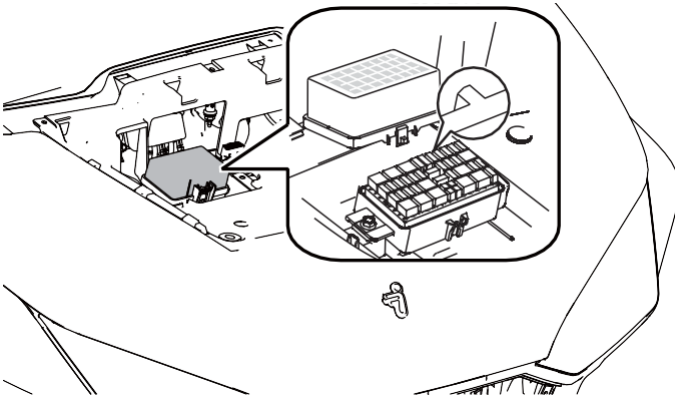

Fuse/Relay ratings and location

There is a fuse location and rating diagram on the top of the fuse box cover. Refer to this diagram when finding a correct fuse for replacement.

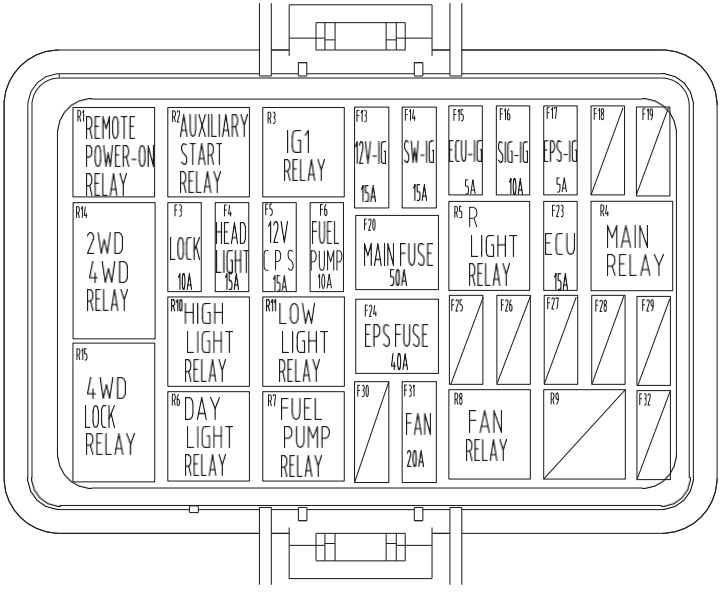

Fuse/Relay ratings and location

No.	Fuse/Relay	Power
F3	LOCK FUSE	10A
F4	HEAD LIGHT FUSE	15A
F5	12V C P S FUSE	15A
F6	FUEL PUMP FUSE	10A
F13	12V-IG FUSE	15A
F14	SW-IG FUSE	15A
F15	ECU-IG FUSE	5A
F16	SIG-IG FUSE	10A
F17	EPS-IG FUSE	5A
F20	MAIN FUSE	50A
F23	ECU FUSE	15A
F24	EPS FUSE	40A
F31	FAN FUSE	20A
R1	REMOTE POWER-ON RELAY	12V 20A
R2	AUXILIARY START RELAY	12V 20A
R3	IG1 RELAY	12V 20A
R4	MAIN RELAY	12V 20A
R5	R LIGHT RELAY	12V 20A
R6	DAY LIGHT RELAY	12V 20A
R7	FUEL PUMP RELAY	12V 20A
R8	FAN RELAY	12V 20A
R10	HIGH LIGHT RELAY	12V 20A
R11	LOW LIGHT RELAY	12V 20A
R14	2WD 4WD RELAY	12V 20A
R15	4WD LOCK RELAY	12V 20A

Fuse replacement

To prevent an accidental short circuit, turn the ignition switch to the (OFF) position and check or replace the fuse(s).

To check or replace the fuse, pull out the fuse with a puller.

The fuse box cover is equipped with a puller. Using this tool will help you take out the fuse;

The fuse box cover is fitted with a common fuses which can be replaced.

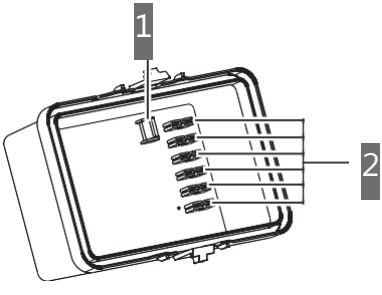

1 **Puller** 2 **Spare fuses**

NOTICE
If a suitable fuse rating is not available, install a lower rated fuse.

APPEARANCE AND CARE

Vehicle washing

High pressure washer can damage parts and remove paint and decals.

1. Cover or plug the exhaust prior to washing your vehicle.
2. Fill a bucket with water. Mix in a mild, neutral detergent, such as dish washing liquid or a product made especially for washing motorcycles or automobiles.
3. Wash your vehicle with a sponge or soft towel. As you wash, check for heavy grime. If necessary, use a mild cleaner/ degreaser to remove the grime.
4. After washing, rinse your vehicle thoroughly with plenty of clean water to remove any residues. Detergent residues can corrode alloy parts.
5. Dry your vehicle with a chamois or a soft towel. Leaving water on the surface to air dry can cause dulling and water spots. Inspect outer surfaces for chips and scratches.
6. Ride your vehicle at a slow speed and apply the brakes several times. This will help to dry the brakes and restore normal braking performance.

Vehicle Storage

When the vehicle is not used for a long period of time, it should be appropriately stored. The vehicle should be parked and cleaned. If there is no indoor storage possibility, covered outdoor storage is acceptable.

SPECIFICATIONS

TECHNICAL PARAMETERS **154**
VEHICLE IDENTIFICATION NUMBER **158**
Identification plate 160

TECHNICAL PARAMETERS

Segway Fugleman UT10	
VEHICLE	
Length × width × height	3075 × 1599 × 2065 mm
Wheelbase	2085 mm
Track width front	1350 mm
Track width rear	1320 mm
Curb weight	750 kg
Ground clearance	320 mm
Turning radius	8500 mm
Seat height	500 mm
Steering wheel diameter	350 mm
Maximum capacity	680 kg
EPS type	Electric (optional)
Air filter element	Paper type
Shift operation mode	Mechanical
Fuel capacity	45 L
Coolant capacity	7500 ml
POWERTRAIN / TRANSMISSION	
Engine type	Twin cylinder liquid cooled Inline 4stroke
Engine model	293MY-1
Displacement	1000 ccm
Compression ratio	10.9 : 1
Bore x stroke	93 × 73.6 mm

Starting		Electric start
Ignition type		ECU
Spark plug type		NGK CPR7EA
Spark plug gap		0.7-0.9 mm
Lubrication		Wet sump
Cooling		Liquid cooling
Lubricating oil	Engine	SAE10W-50/SL or higher
	Gearbox	SAE 75/80W-90 GL5
	Front Axle	SAE 75/80W-90 GL5
Lubricating oil volume	Engine	3200 ml
	Gearbox	1500 ml
	Front Axle	180 ml
Generator		580 W
Fuel type		Unleaded, 95 octane
CVT transmission ratio		0.891～3.608
Primary transmission ratio		H：1.2
		L：2.15
		R：2.388
Secondary transmission ratio		1.8
Three-stage transmission ratio		1.52
Final transmission ratio		To Fr. Bridge：0.95
Power transmission		Axle
Fr. Bridge		3.67
Rr. Bridge		3.3125
TIRES		
Rim type （Specification）	Fr. Wheel	Aluminum rim（14×6.5）or Steel rim（14×6.0）
	Rr. Wheel	Aluminum rim（14×7.0）or Steel rim（14×7.5）

Tires	Fr. Wheel	27×9.00 - 14	27×9.00-14
	Rr. Wheel	27×9.00R14	27×11.00R14
Tire pressure	Fr. Wheel	103 KPa	
	Rr. Wheel	110 KPa	
Brake system	Type	Hydraulic/Disc	
	Operation	Right feet	
Parking brake	Type	Mechanical， Automatic adjustable type	
	Operation	By hand	
SUSPENSION			
Fr. Suspension stroke		280 mm	
Rr. Suspension stroke		270 mm	
Suspension type	Front	Double-wishbone independent suspension	
	Rear	Double-wishbone independent suspension	
Shock absorber	Front	Hydraulic, spring	
	Rear	Hydraulic, spring	
ELECTRICAL			
Headlights	Headlight	H4/55W×2/32000cd	
	Fr. Position light	LED×7/0.5W	
	Daytime Running Light	LED×21/4.2W	
	Fr. flashers	-	Amber/ LED×1/4.8W

Tail light	Rr. Brake light	Red/21W/P21/5W	
	Rr. Position light	Red/5W/P21/5W	
	Rr. flashers	-	Amber/10W/ RY10W
License plate light		-	White/5W/W5W
Battery		Maintenance-free, lead acid, 12V, 32Ah	
Winch		3500 lbs	

VEHICLE IDENTIFICATION NUMBER - VIN

Record the VIN number and engine serial number in the spaces provided for assistance when ordering spare parts from a dealer, or for reference in case the vehicle is stolen.

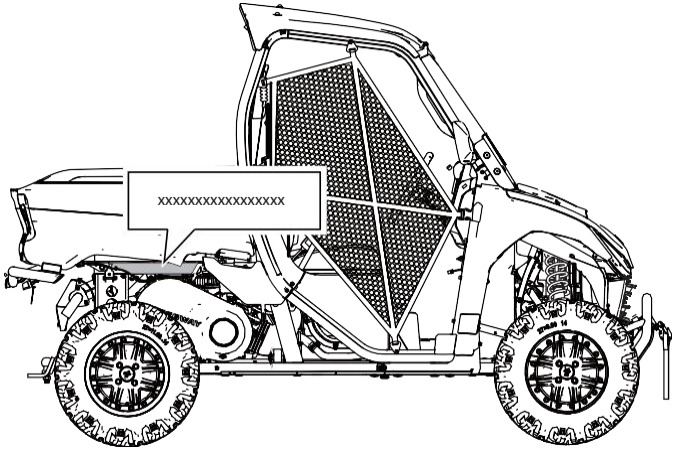

VIN Number:	

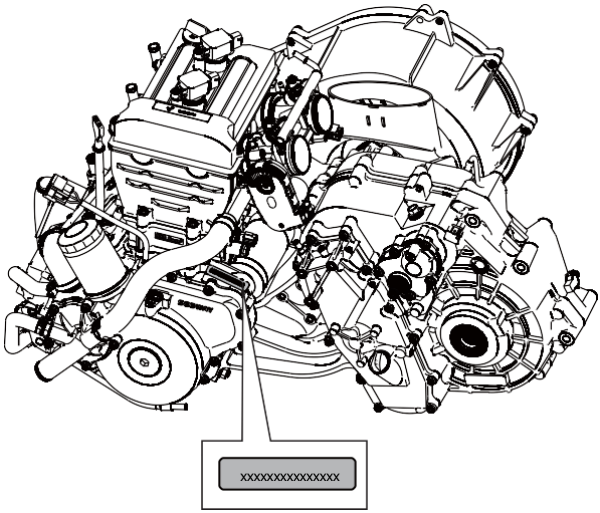

Engine Serial Number

Engine serial No:	

Identification plate

Identification plate contains key vehicle information including VIN number. VIN number is required when the vehicle is activated for the first time.

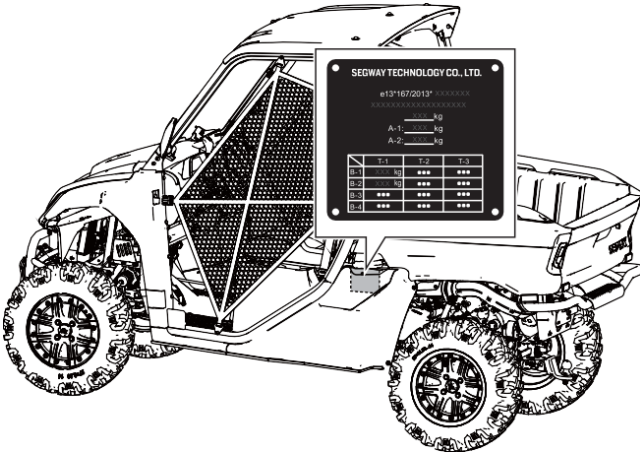

TROUBLESHOOTING

Drive belt / CVT clutch 162
Engine doesn't turn over 164
Engine pings or knocks 164
Engine stops or loses power 165
Engine turns over, fails to start 165
Engine backfires 166
Engine runs irregularly, stalls or misfires 167
Engine runs irregularly, stalls or misfires 168
Engine stops or loses power 169

With all the challenges that you can encounter in off-road, there's chance that sometime may something go wrong. This section gives you practical advice to help you deal with a wide range of problems. Take time to read it before you ride.

Drive belt / CVT Clutch

Possible Cause	Solution
Driving the vehicle onto a pickup or trailer in high range	Shift transmission to low range during loading of the vehicle to prevent belt burning
Starting out going up a steep incline	When starting out on an incline, use low range (see page 75)
Driving at low RPM or low ground speed (at approximately 5-10km/h)	Drive at a higher speed or use low range more frequently. The use of low range is highly recommended for cooler CVT operating temperatures and longer component life
Insufficient engine warm-up in low ambient temperatures	Warm the engine before driving, the belt will become more flexible and prevent belt burning
Slow and hesitating clutch engagement	Use the throttle quickly and effectively for efficient clutch engagement
Towing/pushing at low RPM/low ground speed	Use Low range only
Utility use/plowing snow, dirt, etc.	Use Low range only

Possible Cause	Solution
Stuck in mud or snow	Shift the transmission to low range, and carefully use fast, aggressive throttle application to engage clutch. WARNING: Excessive throttle may cause loss of control and vehicle overturn
Climbing over a large objects from a stopped position	Shift the transmission to low range, and carefully use fast, brief, aggressive throttle application to engage clutch. WARNING: Excessive throttle may cause loss of control and vehicle overturn
Belt slippage due to water or snow ingestion into the CVT system	Remove the CVT cover，drain the water from CVT
Clutch malfunction	Contact your dealer for inspection of clutch components

Engine doesn't turn over

Possible Cause	Solution
Poor engine performance	Check for fouled plugs or foreign material in gas tank, fuel lines, or throttle. Contact your dealer for service.
Tripped circuit breaker	Reset the breaker
Low battery voltage	Recharge battery
Loose battery connections	Check and tighten all connections
Loose solenoid connections	Check and tighten all connections

Engine pings or knocks

Possible Cause	Solution
Poor quality or low octane fuel	Replace with recommended fuel
Incorrect ignition timing	Visit your dealer
Incorrect spark plug gap or heat range	Set gap to specs or replace plugs

Engine stops or loses power

Possible Cause	Solution
Overheated engine	Clean radiator screen and core if equipped Clean engine exterior Visit your dealer

Engine turns over, fails to start

Possible Cause	Solution
Out of Fuel	Refuel
Clogged fuel valve or filter	Inspect and clean or replace
Water is present in fuel	Drain the fuel system and refuel
Fuel valve is out of use	Replace
Old or non-recommended fuel	Replace with new fuel
Fouled or defective spark plug(s)	Inspect plug(s), replace if necessary
No spark to spark plug	Inspect plug(s), verify Stop switch is on
Crankcase filled with water or fuel	Immediately Visit your dealer
Overuse of choke	Inspect, clean and/or replace spark plugs

Clogged fuel injector	Clean or replace new fuel injector
Low battery voltage	Recharge battery
Mechanical failure	Visit your dealer

Engine backfires

Possible Cause	Solution
Weak spark	Inspect, clean and/or replace spark plugs
Incorrect spark plug gap or heat range	Set gap to specs or replace plugs
Old or non-recommended fuel	Replace with new fuel
Incorrectly installed spark plug wires	Visit your dealer
Incorrect ignition timing	Visit your dealer
Mechanical failure	Visit your dealer

Engine runs irregularly, stalls or misfires

Possible Cause	Solution
Fouled or defective spark plugs	Inspect, clean and/or replace spark plugs
Worn or defective spark plug wires	Visit your dealer
Incorrect spark plug gap or heat range	Set gap to specs or replace plugs
Loose ignition connections	Check all connections and tighten
Water present in fuel	Replace with new fuel
Low battery voltage	Recharge battery

Engine runs irregularly, stalls or misfires

Possible Cause	Solution
Kinked or plugged fuel vent line	Inspect and replace
Incorrect fuel	Replace with recommended fuel
Clogged air filter	Inspect and clean or replace
Reverse speed limiter (Override system) malfunction	Visit your dealer
Electronic throttle control malfunction	Visit your dealer
Other mechanical failure	Visit your dealer
Possible lean or rich fuel mixture	Visit your dealer
Low or contaminated fuel	Add or change fuel, clean the fuel system
Low-octane fuel	Replace with recommended fuel
Clogged fuel filter	Replace fuel filter
Fuel is very high octane	Replace with lower octane fuel

Engine stops or loses power

Possible Cause	Solution
Out of fuel	Refuel
Kinked or plugged fuel vent line	Inspect and replace
Water present in fuel	Replace with new fuel
Overuse of choke	Inspect, clean and/or replace spark plugs
Fouled or defective spark plugs	Inspect, clean and/or replace spark plugs
Worn or defective spark plug wires	Visit your dealer
Incorrect spark plug gap or heat range	Set gap to specs or replace plugs
Loose ignition connections	Check all connections and tighten
Low battery voltage	Recharge battery
Clogged air filter	Inspect and clean or replace
Reverse speed limiter (Override system) malfunction	Visit your dealer
Electronic throttle control malfunction	Visit your dealer
Other mechanical failure	Visit your dealer

EMISSION CONTROL SYSTEM

SOURCE OF EXHAUST EMISSIONS 171
EXHAUST EMISSION CONTROL SYSTEM 171
CRANKCASE EMISSION CONTROL SYSTEM 171
NOISE CONTROL SYSTEM 171

SOURCE OF EXHAUST EMISSIONS

The combustion process produces carbon monoxide (CO), oxides of nitrogen (NOx) and hydrocarbons (HC). Control of hydrocarbons and oxides of nitrogen is very important because, under certain conditions, they react to form photochemical smog when subjected to sunlight. Carbon monoxide does not react in the same way, but it is toxic.

EXHAUST EMISSION CONTROL SYSTEM

The exhaust emission control system includes a PGM-F system and oxygen sensor.

No adjustments to this system should be made although periodic inspection of the components is recommended.

The exhaust emission control system is separate from the crankcase emission control system.

CRANKCASE EMISSION CONTROL SYSTEM

The engine is equipped with a closed crankcase ventilation system to prevent discharging the crankcase gases into the atmosphere. Blow-by gases are returned to the combustion chamber through the air filter box.

NOISE CONTROL SYSTEM

Do not modify the engine, air intake or exhaust components in order to meet local noise level requirements.

SEGWAY TECHNOLOGY CO., LTD.

powersports.segway.com

Distributed by:

Segway Powersports s.r.o.

Staroplzenecka 290, 326 00, Letkov
Czech Republic
+420 378 21 21 21

info@segwaypowersports.cz
www.segwaypowersports.cz

Segway Powersports reserves the right to make any technical changes to the construction and design without prior notice.
If in doubt, please contact your dealer, or directly Segway Powersports s.r.o., Czech Republic.

© Copyright Segway Powersports s.r.o. 2021

All information contained within this publication is based on the latest product information at the time of publication. Due to constant improvements in the design and quality, some depictions, information and specifications may differ from those presented in this publication. Depictions and/or procedures in this publication are intended for reference use only. No liability can be accepted for omissions or inaccuracies. Any reprinting or reuse of the depictions and/or procedures contained within, whether whole or in part, is expressly prohibited.

Version: 20210707
U09L01000002